CITY OF PERRIS

DEVELOPMENT SERVICES DEPARTMENT
PLANNING DIVISION
135 NORTH "D" STREET, PERRIS, CA. 92570-2200
TEL: (951) 943-5003 FAX(951) 943-8379

IRRIGATION DETAIL

1. CURB, SIDEWALK, ETC.
2. FINISH GRADE 1" BELOW TOP OF BOX 1/2" FOR TURF & 1" FOR GROUND COVER.
3. ROUND PLASTIC VALVE BOX W/ LOCKING TOP (HEAT BRANDED 'BV' IN 2" LETTERS)
4. TRUE UNION BALL VALVE
5. SxT SCH. 80 FITTING (TYP.)
6. 2 C.F. PEA GRAVEL SUMP
7. SCH. 80 PVC NIPPLE
8. BRICK CONT. (TYP.X1 OF 4)

NOTE:

ALL VALVES TO BE INSTALLED IN PLANTER AREAS WHERE POSSIBLE

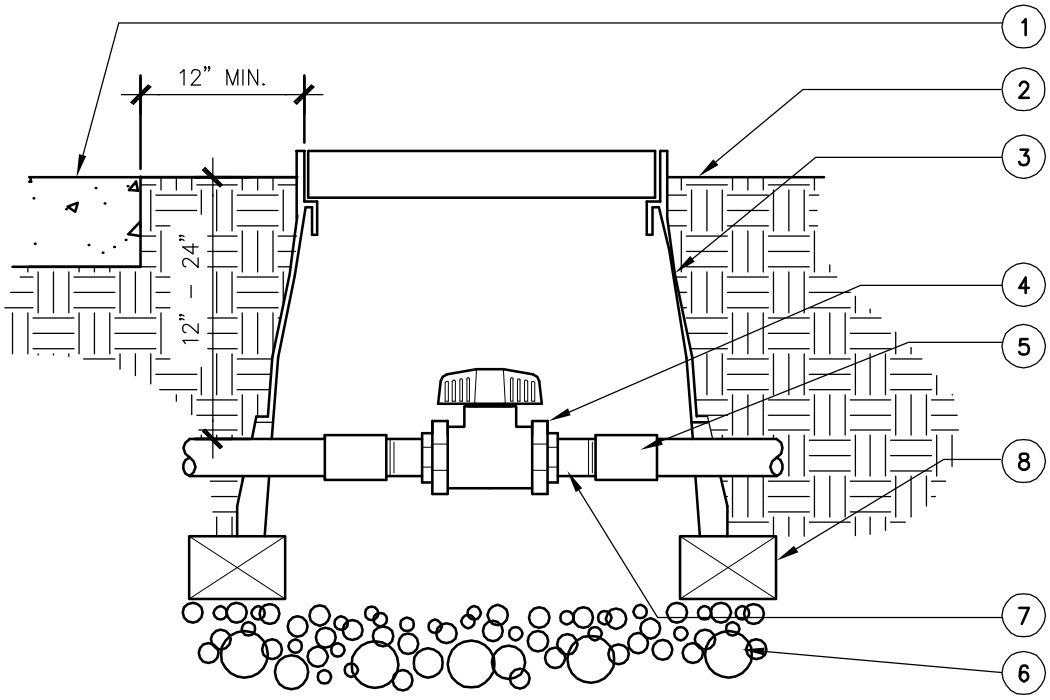

2/08

CITY OF PERRIS
CITY LANDSCAPE ARCHITECT

RON KAMMEYER

BALL VALVE

I-1

CITY OF PERRIS

DEVELOPMENT SERVICES DEPARTMENT
PLANNING DIVISION
135 NORTH "D" STREET, PERRIS, CA. 92570-2200
TEL: (951) 943-5003 FAX(951) 943-8379

IRRIGATION DETAIL

1 30-INCH LINEAR LENGTH OF WIRE, COILED
2 WATERPROOF CONNECTION
3 ID TAG: RAIN BIRD VID SERIES OR EQUAL
4 REMOTE CONTROL VALVE
5 VALVE BOX WITH COVER.
6 TOP OF MULCH BELOW TOP OF COVER 1/2" FOR TURF & 1" FOR GROUND COVER
7 PVC SCH 80 NIPPLE
8 PVC SCH 40 ELL
9 PVC SCH 80 NIPPLE (LENGTH AS REQUIRED)
10 BRICK (1 OF 4)
11 PVC MAINLINE PIPE
12 SCH 40 NIPPLE (2-INCH LENGTH, HIDDEN) AND SCH 40 ELL
13 PVC SCH 40 TEE OR ELL
14 PVC SCH 40 MALE ADAPTER
15 PVC LATERAL PIPE
16 30-INCH MINIMUM DEPTH OF 3/4-INCH WASHED GRAVEL

NOTE:
FOR RECLAIMED WATER USE PURPLE VALVE BOX COVER, PIPE, ET. AL.

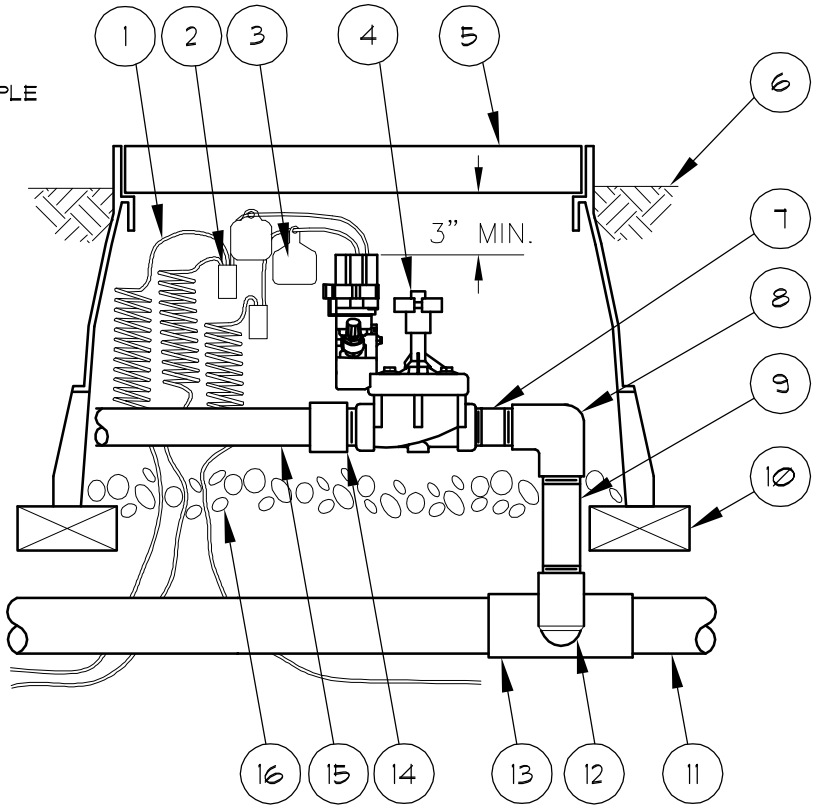

2/08

CITY OF PERRIS
CITY LANDSCAPE ARCHITECT
RON KAMMEYER

REMOTE CONTROL VALVE

I-2

CITY OF PERRIS

DEVELOPMENT SERVICES DEPARTMENT
PLANNING DIVISION
135 NORTH "D" STREET, PERRIS, CA. 92570-2200
TEL: (951) 943-5003 FAX(951) 943-8379

IRRIGATION DETAIL

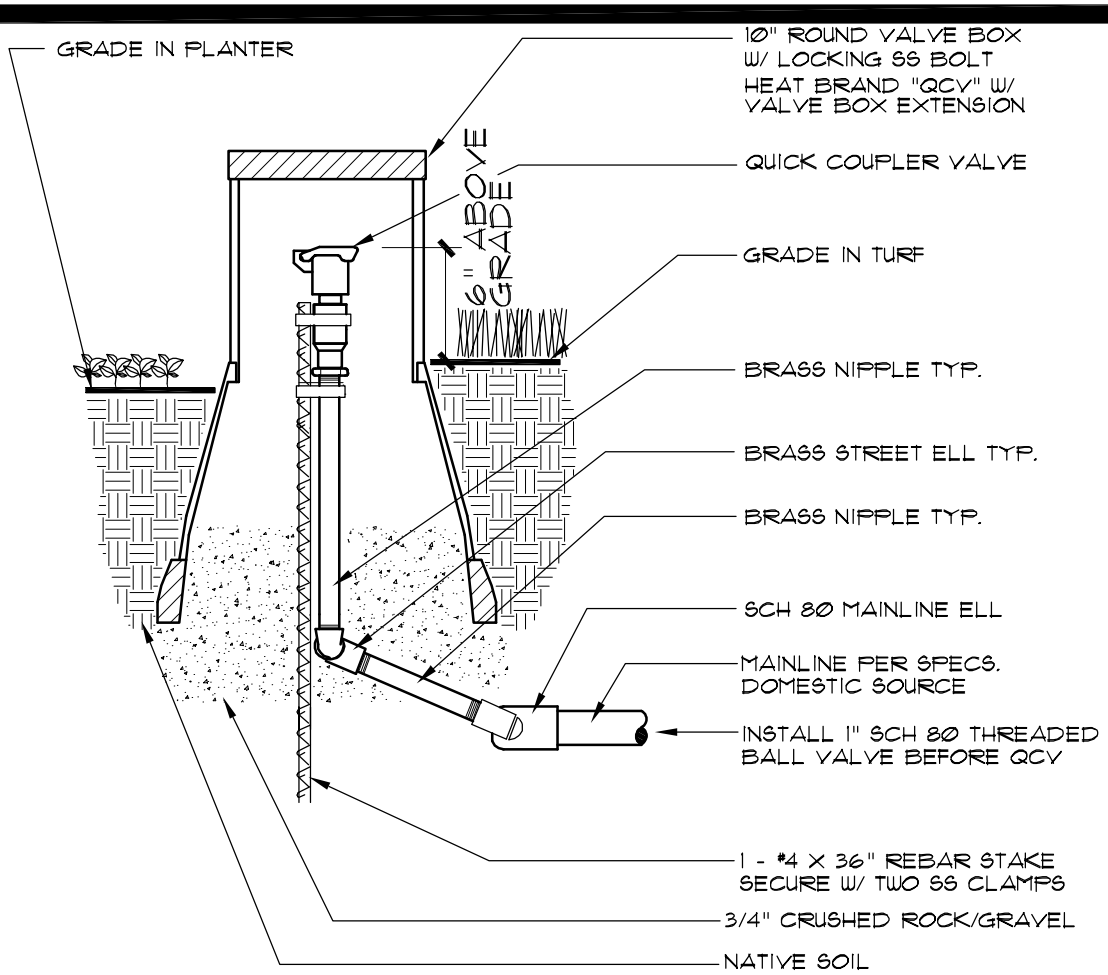

NOTES:

1. ALL THREADED FITTINGS MUST HAVE 3/4" TEFLON TAPE
2. PROVIDE QUICK COUPLER KEY PER SPECS.
3. USE ONE #4X36" REBAR FOR QCV
4. PROVIDE 3" CLEARANCE BETWEEN VALVE & BOX
5. PROVIDE 2 EA. CLAY BRICKS UNDER VALVE BOX (TYP.)
6. ALL QCV'S MUST HAVE A 1" SCH 80 BALL VALVE UPSTREAM MAINLINE.

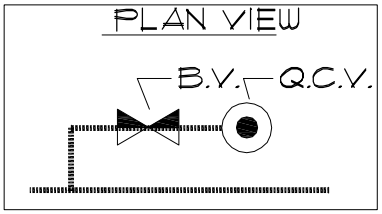

DOMESTIC WATER SOURCE IN RECLAIMED WATER AREA

2/08

CITY OF PERRIS
CITY LANDSCAPE ARCHITECT

RON KAMMEYER

QUICK COUPLER VALVE
(ADJACENT TO RECLAIMED WATER SYSTEMS)

I-3

CITY OF PERRIS

DEVELOPMENT SERVICES DEPARTMENT
PLANNING DIVISION
135 NORTH "D" STREET, PERRIS, CA. 92570-2200
TEL: (951) 943-5003 FAX(951) 943-8379

IRRIGATION DETAIL

1. FINISH GRADE.
2. POP-UP SPRAY HEAD WITH ANTI-DRAIN VALVE. SET TOP OF HEAD 1/2" ABOVE GRADE.
3. SCH. 80 PVC TxT 90° ELL.
4. SCH. 80 PVC TxT 90° STREET ELL.
5. SCH. 80 PVC NIPPLE (TYP.).
6. LATERAL LINE PIPE (SCH. 40) AND FITTING.
7. SCH. 80 PVC TxT 90° STREET ELL.
8. NEW PREFAB SWING JOINT. ALLOW FOR TEE TO POINT UP. POINT TEE UP FOR EASY INSTALLATION.

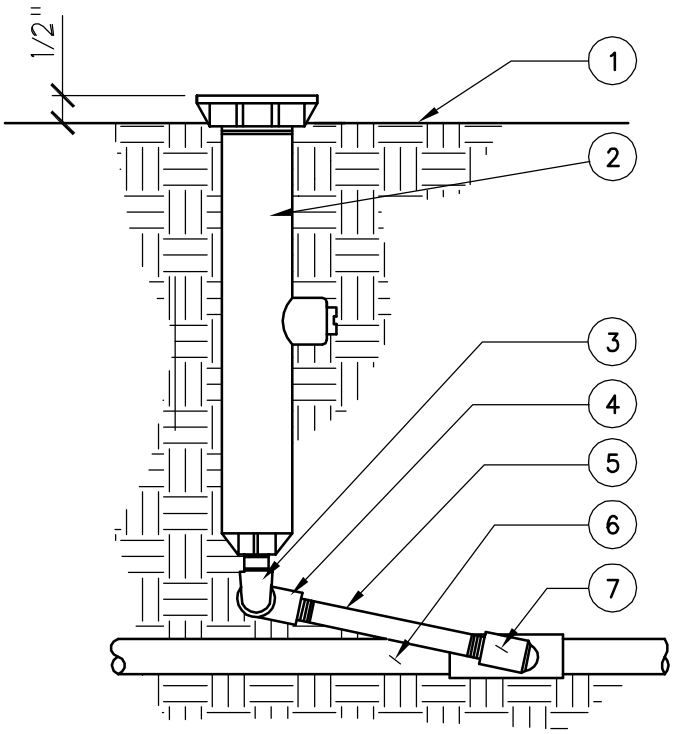

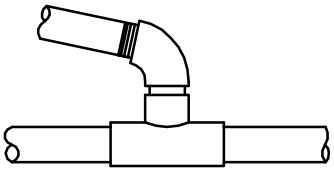

ALT. (PREFAB.)

2/08

CITY OF PERRIS
CITY LANDSCAPE ARCHITECT

RON KAMMEYER

POP UP SPRAY HEAD

I-4

CITY OF PERRIS

DEVELOPMENT SERVICES DEPARTMENT
PLANNING DIVISION
135 NORTH "D" STREET, PERRIS, CA. 92570-2200
TEL: (951) 943-5003 FAX(951) 943-8379

IRRIGATION DETAIL

1. ANTI-SIPHON VALVE
2. TAPE CONTROL WIRE TO PVC NIPPLE
3. SCH. 80 PVC NIPPLE(TYP)
4. FINISH GRADE
5. SCH. 80 PVC ELL ADAPT TO LATERAL LINE
6. CONTROL WIRE TO CONTROLLER
7. SCH. 80 PVC ELL ADAPT TO MAIN LINE
8. SCH. 40 LATERAL

NOTE:
INSTALL ANTI- SIPHON VALVE 12" MIN. ABOVE HIGHEST HEAD & PER LOCAL CODE

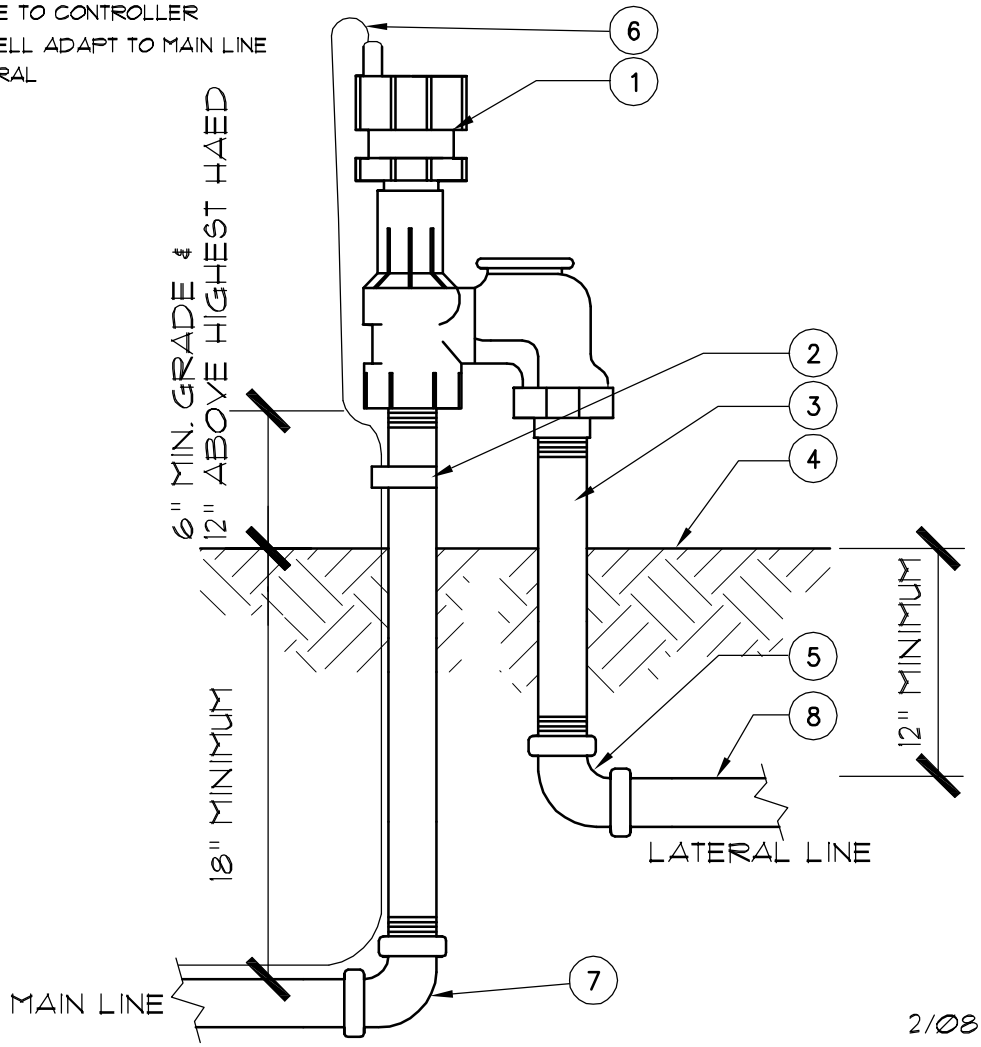

2/08

CITY OF PERRIS
CITY LANDSCAPE ARCHITECT
RON KAMMEYER

ANTI-SIPHON VALVE (RESIDENTIAL USE ONLY)

I-5

CITY OF PERRIS

DEVELOPMENT SERVICES DEPARTMENT
PLANNING DIVISION
135 NORTH "D" STREET, PERRIS, CA. 92570-2200
TEL: (951) 943-5003 FAX(951) 943-8379

IRRIGATION DETAIL

1. FEBCO 825YA REDUCE PRESSURE BACKFLOW
2. BRASS RISER. SIZE TO MATCH BACKFLOW
3. CONCRETE BASE
4. COMPACTED SUB-GRADE
5. FINISH GRADE, 1" BELOW CONCRETE PAD
6. VALVE BOX
7. BALL VALVE
8. TO BALL VALVE
9. 3/4" CRUSHED STONE
10. SMALL RECTANGULAR VALVE BOX W/ OUT LID
11. FROM METER
12. STAINLESS STEEL ENCLOSURE
13. BRASS TxT COUPLER
14. BRASS ELBOW

NOTE
SCREEN WITH SHRUBS WHEN POSSIBLE

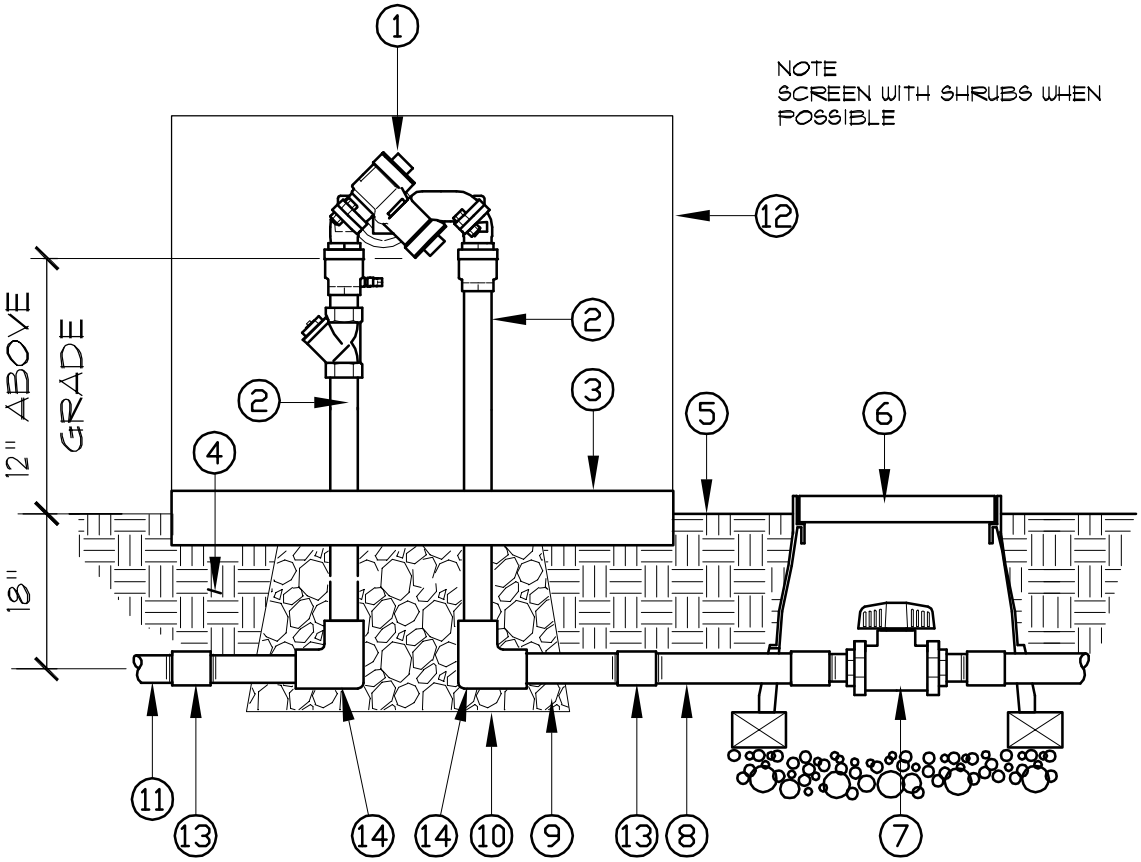

2/08

CITY OF PERRIS
CITY LANDSCAPE ARCHITECT
RON KAMMEYER

REDUCED PRESSURE BACKFLOW PREVENTER

I-6

CITY OF PERRIS

DEVELOPMENT SERVICES DEPARTMENT
PLANNING DIVISION
135 NORTH "D" STREET, PERRIS, CA. 92570-2200
TEL: (951) 943-5003 FAX(951) 943-8379

IRRIGATION DETAIL

LEGEND:

1. HARDSCAPE SURFACE
2. CLEAN BACKFILL AS REQUIRED. TO BE SET IN 6" LIFTS.
3. LATERAL LINE WITH SLEEVE.
4. PRESSURE MAIN LINE WITH SLEEVE.
5. CLEAN SAND.
6. CONTROL WIRES & COMPUTER HARDWARE WIRE SLEEVE.

NOTES:

ALL SLEEVES TO BE PVC. SCH. 40 AND TWICE THE DIAMETER OF THE WORKING PIPE.

ALL SLEEVES TO RUN A MIN. OF 12" BEYOND HARDSCAPE EDGES.

CLEAN BACKFILL MAY BE SUBSTITUTED FOR SAND UNDER WALKS AND DRIVES.

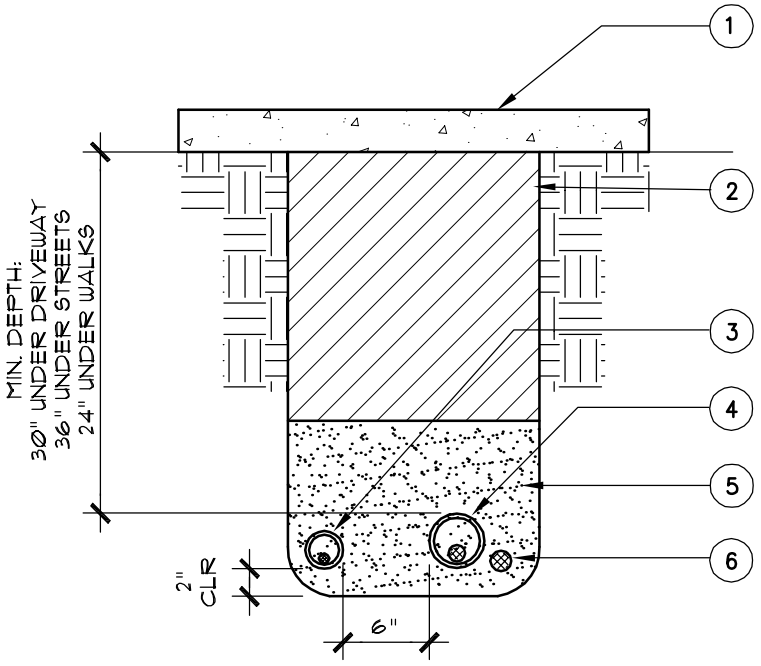

12/07

CITY OF PERRIS
CITY LANDSCAPE ARCHITECT
RON KAMMEYER

SLEEVING

I-7

CITY OF PERRIS

DEVELOPMENT SERVICES DEPARTMENT
PLANNING DIVISION
135 NORTH "D" STREET, PERRIS, CA. 92570-2200
TEL: (951) 943-5003 FAX(951) 943-8379

IRRIGATION DETAIL

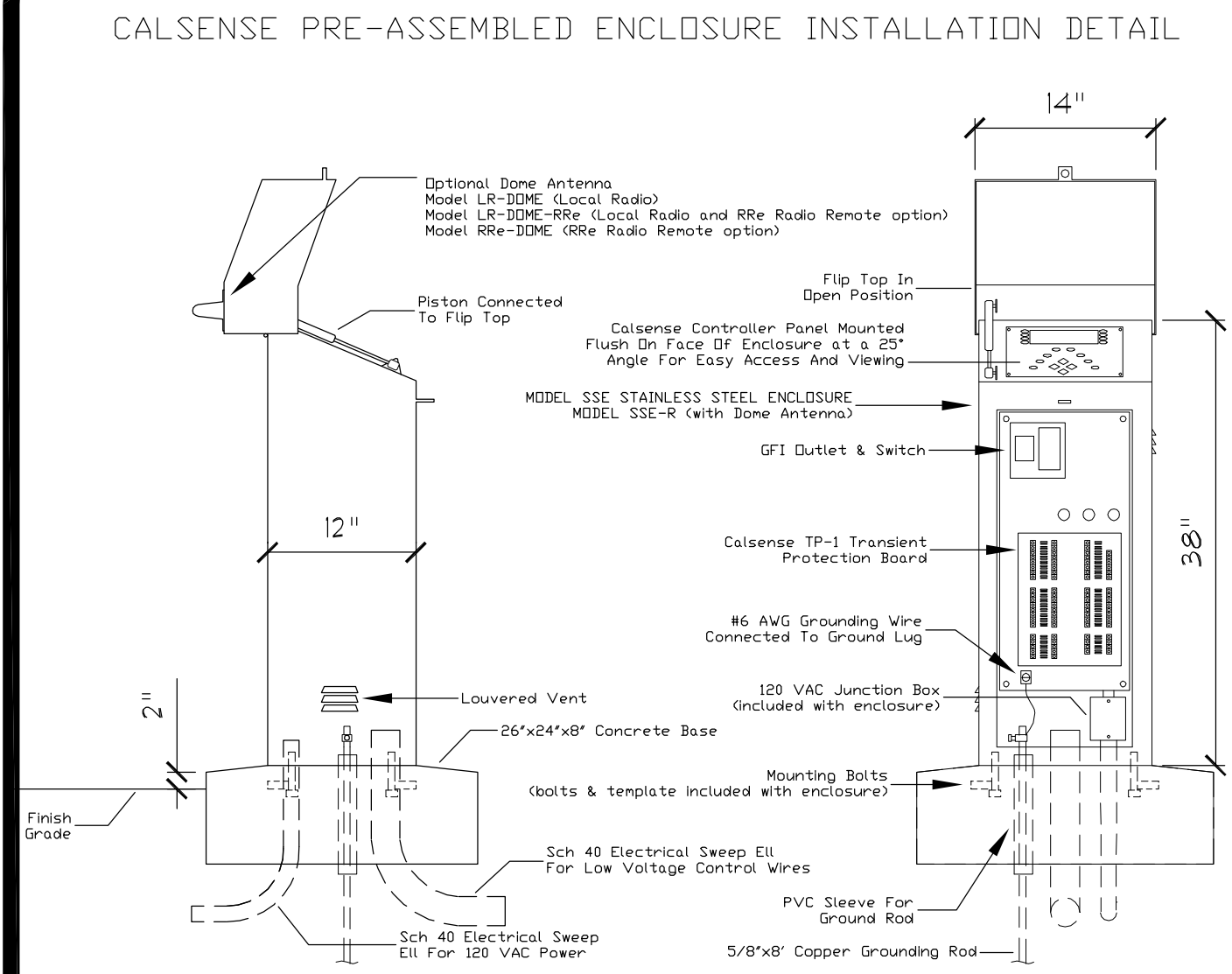

CITY OF PERRIS
CITY LANDSCAPE ARCHITECT
RON KAMMEYER

EXTERIOR CONTROLLER

I-8

CITY OF PERRIS

DEVELOPMENT SERVICES DEPARTMENT
PLANNING DIVISION
135 NORTH "D" STREET, PERRIS, CA. 92570-2200
TEL: (951) 943-5003 FAX(951) 943-8379

IRRIGATION DETAIL

NOTE:
1. CONTROLLER WIRES WILL BE PLACED IN SCH 40 PVC SLEEVE FROM WHERE WIRES ENTER GARAGE TO CONTROLLER.
2. MOUNT CONTROLLER ON GARAGE WALL. PLACE BASE OF CONTROLLER 48" FROM FINISH SURFACE OF GARAGE FLOOR.
3. RAIN SHUT OFF DEVICE REQUIRED

1 INDEPENDENT STATION CONTROLLER. WALL MOUNTED

2 HARD WIRE P.O.C.

3 1 1/2" PVC SCH 40 CONDUIT AND FITTINGS

4 JUNCTION BOX

5 WIRES TO REMOTE CONTROL VALVES

6 1" PVC SCH 40 CONDUIT TO POWER SUPPLY

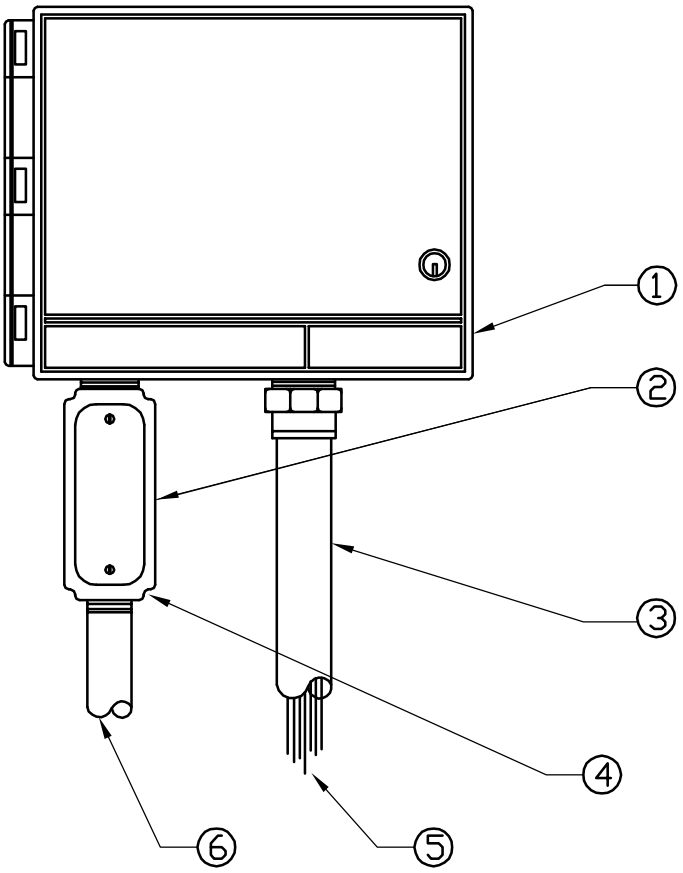

2/08

CITY OF PERRIS
CITY LANDSCAPE ARCHITECT
RON KAMMEYER

WALL MTD. INTERIOR CONTROLLER

I-9

CITY OF PERRIS

DEVELOPMENT SERVICES DEPARTMENT
PLANNING DIVISION
135 NORTH "D" STREET, PERRIS, CA. 92570-2200
TEL: (951) 943-5003 FAX(951) 943-8379

IRRIGATION DETAIL

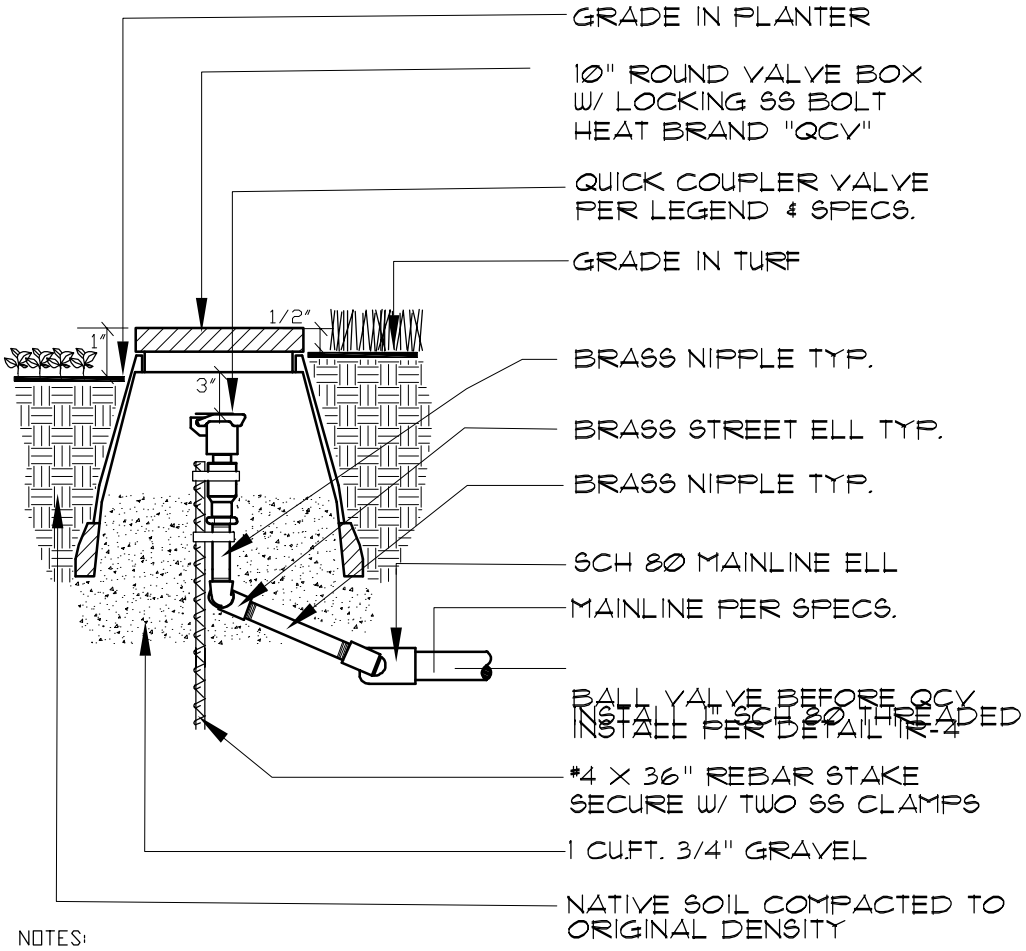

NOTES:

1. ALL THREADED FITTINGS MUST HAVE 3/4" TEFLON TAPE
2. PROVIDE QUICK COUPLER KEY PER SPECS.
3. USE TWO #4X36" REBAR FOR QCV FOR SPORTS FIELDS
4. PROVIDE 3" CLEARANCE BETWEEN VALVE & BOX
5. PROVIDE 2 EA. CLAY BRICKS UNDER VALVE BOX (TYP.)
6. ALL QCV'S MUST HAVE A 1" SCH 80 BALL VALVE UPSTREAM MAINLINE.

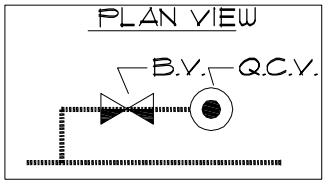

DOMESTIC WATER SOURCE IN RECLAIMED WATER AREA 2/08

CITY OF PERRIS
CITY LANDSCAPE ARCHITECT
RON KAMMEYER

DOMESTIC QUICK COUPLER

I-10

CITY OF PERRIS

DEVELOPMENT SERVICES DEPARTMENT
PLANNING DIVISION
135 NORTH "D" STREET, PERRIS, CA. 92570-2200
TEL: (951) 943-5003 FAX(951) 943-8379

IRRIGATION DETAIL

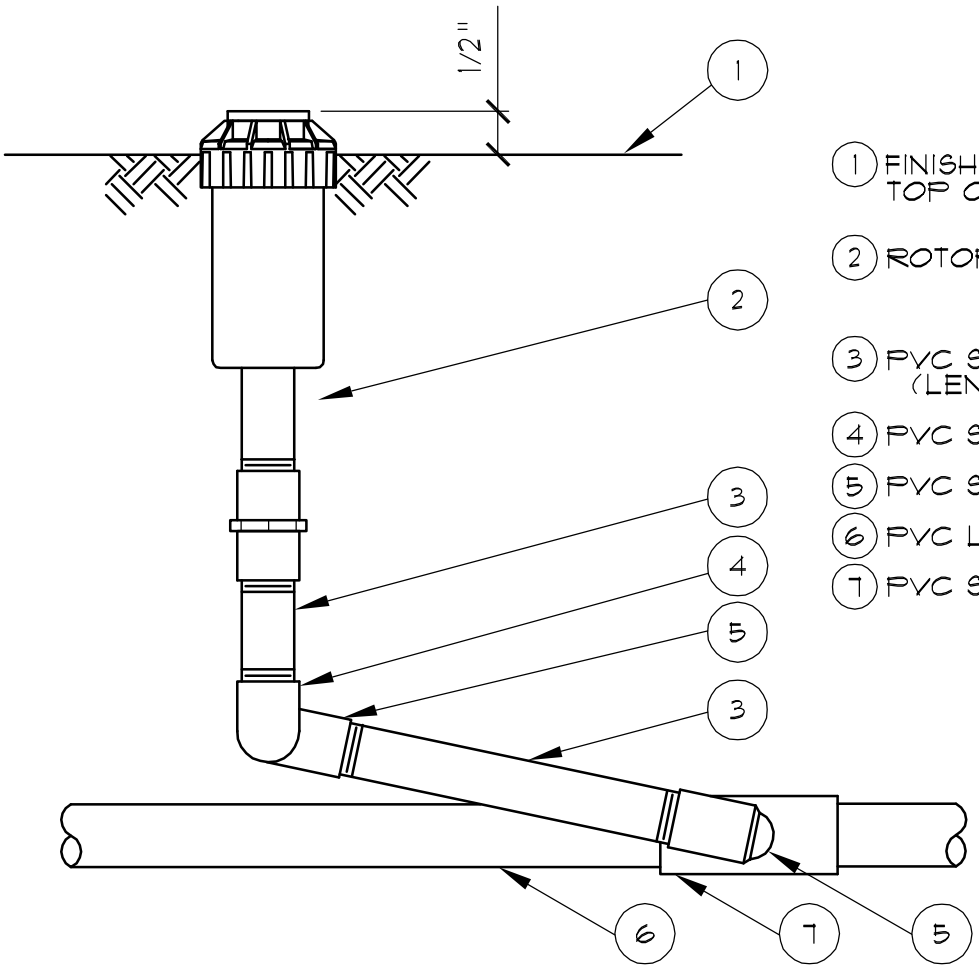

1. FINISH GRADE. 1/2" BELOW TOP OF HEAD
2. ROTOR POP-UP SPRINKLER:
3. PVC SCH 80 NIPPLE (LENGTH AS REQUIRED)
4. PVC SCH 40 ELL
5. PVC SCH 40 STREET ELL
6. PVC LATERAL PIPE. SCH. 40
7. PVC SCH 40 TEE OR ELL

12/07

CITY OF PERRIS
CITY LANDSCAPE ARCHITECT
RON KAMMEYER

ROTOR SPRAY

I-11

CITY OF PERRIS

DEVELOPMENT SERVICES DEPARTMENT
PLANNING DIVISION
135 NORTH "D" STREET, PERRIS, CA. 92570-2200
TEL: (951) 943-5003 FAX(951) 943-8379

IRRIGATION DETAIL

NOTE: FOR WIRE SIZES No. 14, No. 12 and No. 10.

STEP 1

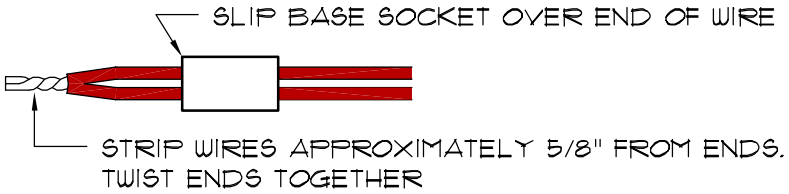

STEP 2

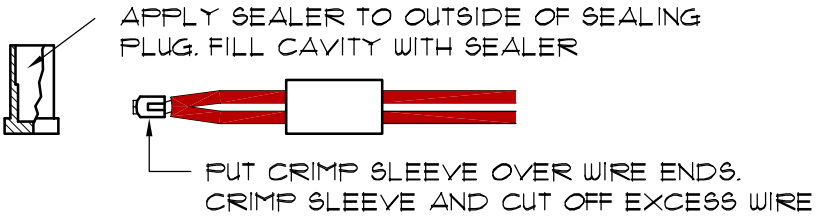

STEP 3

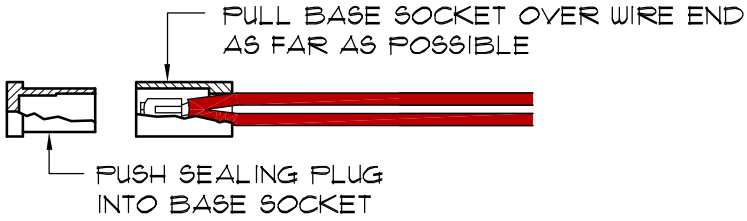

STEP 4

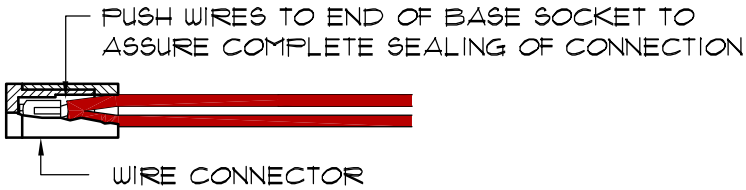

2/08

CITY OF PERRIS
CITY LANDSCAPE ARCHITECT
RON KAMMEYER

IRRIGATION WIRE CONNECTOR

I-12

CITY OF PERRIS

DEVELOPMENT SERVICES DEPARTMENT
PLANNING DIVISION
135 NORTH "D" STREET, PERRIS, CA. 92570-2200
TEL: (951) 943-5003 FAX(951) 943-8379

IRRIGATION DETAIL

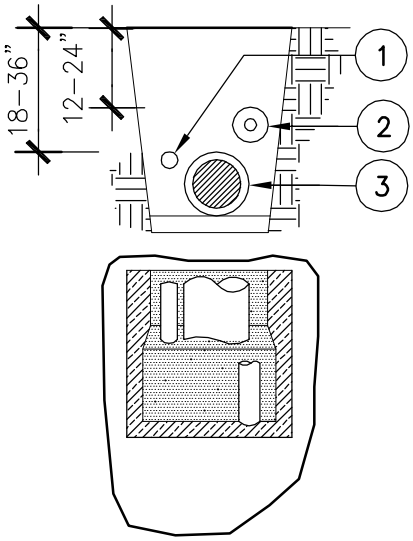

MAIN SUPPLY, LATERAL, & WIRING

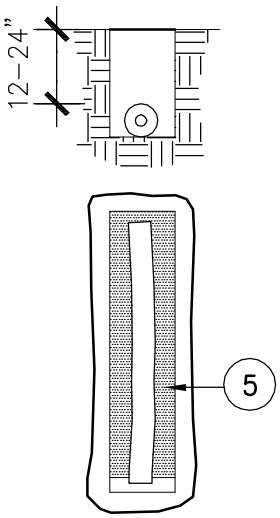

LATERAL

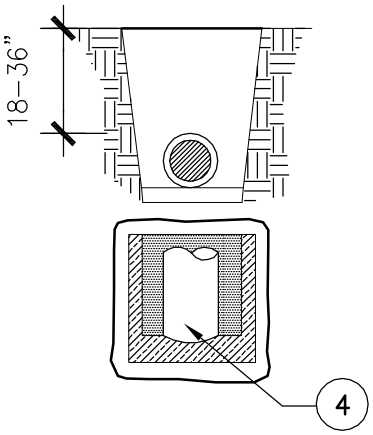

MAIN SUPPLY

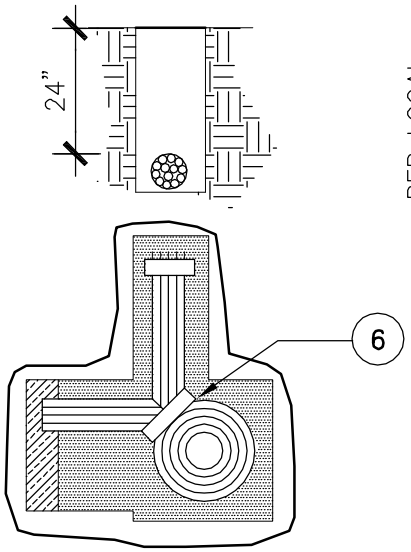

WIRING

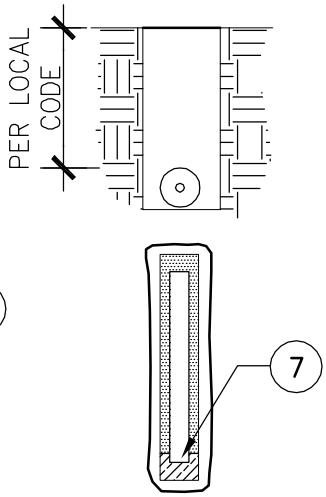

120 VOLT

LEGEND:

1. MAINLINE WIRING- TAPE & BUNDLE 10 FT. O.C. MAX.
2. LATERAL LINE
3. MAINLINE
4. ALL MAINLINES SHALL BE INSTALLED PER MANUFACTURER'S SPECIFICATIONS
5. SNAKE ALL PLASTIC PIPE INTO TRENCHES AS SHOWN.
6. PROVIDE A 20" LOOP IN WIRE @ ALL CHANGES OF DIRECTION GREATER THAN 30°. REMOVE TIES AFTER ALL CONNECTIONS HAVE BEEN MADE.
7. INSTALL ALL 120V WIRE IN CONDUIT PER LOCAL CODE.

12/07

CITY OF PERRIS
CITY LANDSCAPE ARCHITECT
RON KAMMEYER

TRENCHING

I-13

CITY OF PERRIS

DEVELOPMENT SERVICES DEPARTMENT
PLANNING DIVISION
135 NORTH "D" STREET, PERRIS, CA. 92570-2200
TEL: (951) 943-5003 FAX(951) 943-8379

IRRIGATION DETAIL

1. ATMOSPHERIC VACUUM BREAKER (AVB)-LINE SIZE
2. FINISH GRADE
3. PVC MALE ADAPTOR (TYPICAL)
4. SCH. 80 PVC NIPPLE(TYP)
5. STREET ELBOW
6. FROM CONTROL VALVE
7. TO SYSTEM
8. SCH. 80 PVC
9. UVR PVC LATERAL LINE PIPING
10. J-HOOKS REQUIRED TO ABOVE GROUND PIPE.

NOTE: INSTALL ATMOSPHERIC VACUUM BREAKER 12" ABOVE THE HIGHEST HEAD IN THE SYSTEM.

BROWNLINE:
LOCATE ON SLOPE OR BURY 12" SCH. 40 LATERAL

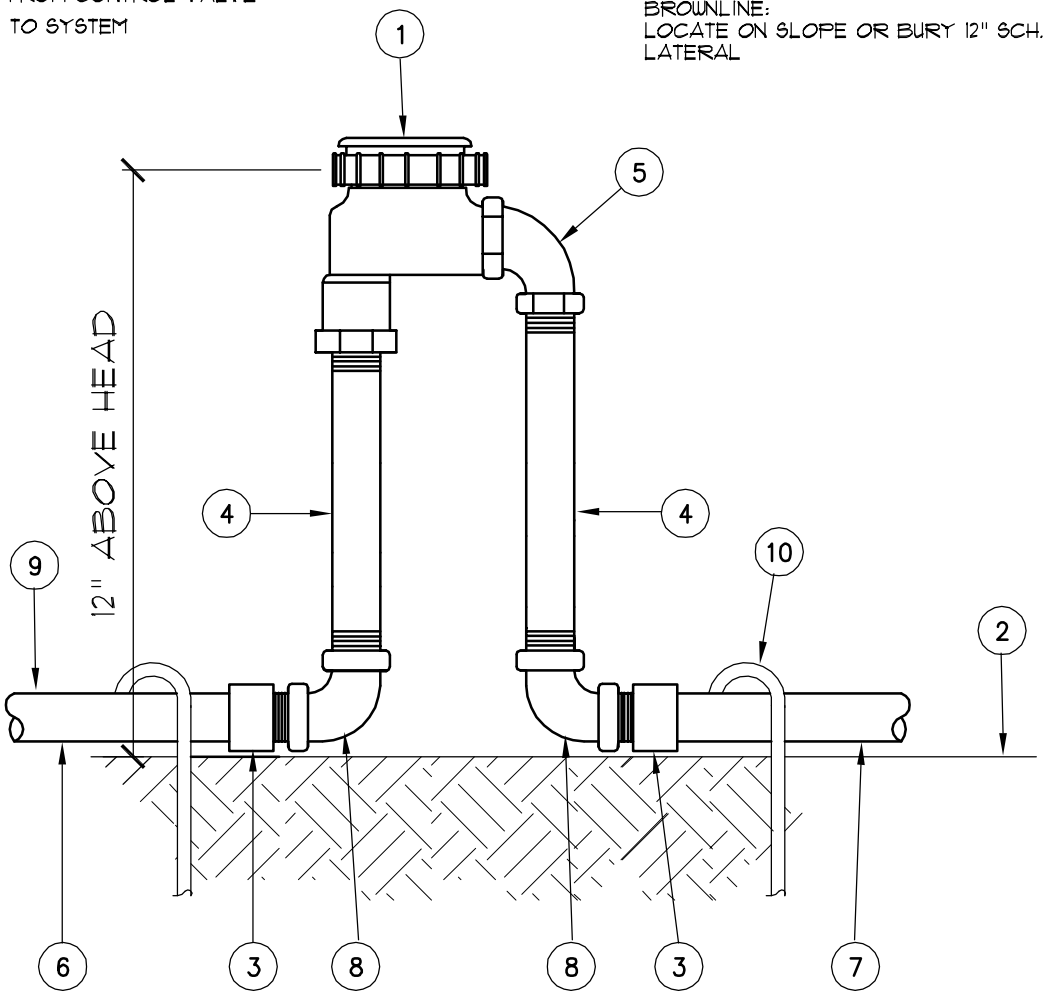

12/07

CITY OF PERRIS
CITY LANDSCAPE ARCHITECT
RON KAMMEYER

ATMOSPHERIC VAC BREAKER | I-14

CITY OF PERRIS

DEVELOPMENT SERVICES DEPARTMENT
PLANNING DIVISION
135 NORTH "D" STREET, PERRIS, CA. 92570-2200
TEL: (951) 943-5003 FAX(951) 943-8379

IRRIGATION DETAIL

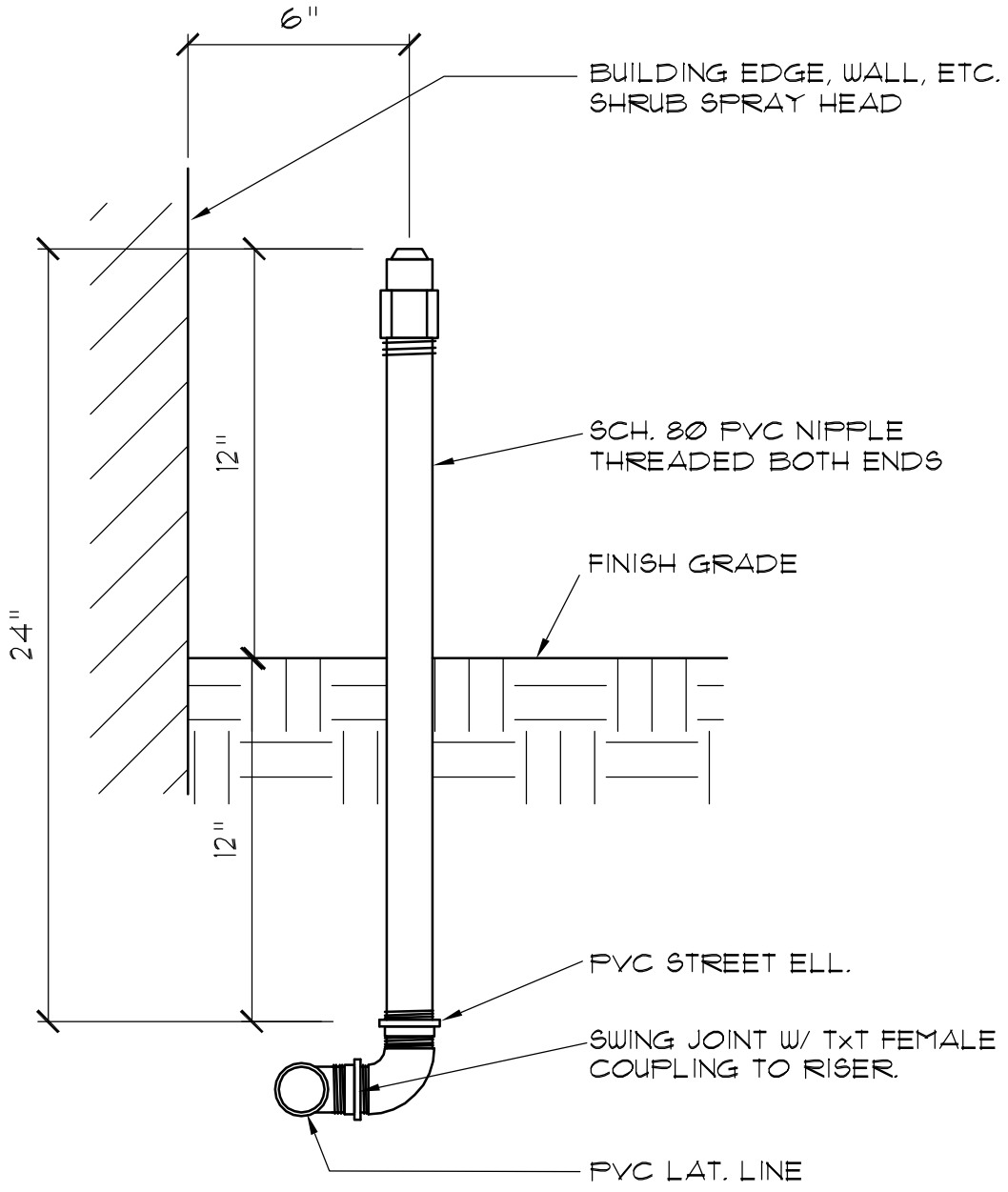

2/08

CITY OF PERRIS
CITY LANDSCAPE ARCHITECT
RON KAMMEYER

SPRAY ON RISER

I-15

CITY OF PERRIS

DEVELOPMENT SERVICES DEPARTMENT
PLANNING DIVISION
135 NORTH "D" STREET, PERRIS, CA. 92570-2200
TEL: (951) 943-5003 FAX(951) 943-8379

IRRIGATION DETAIL

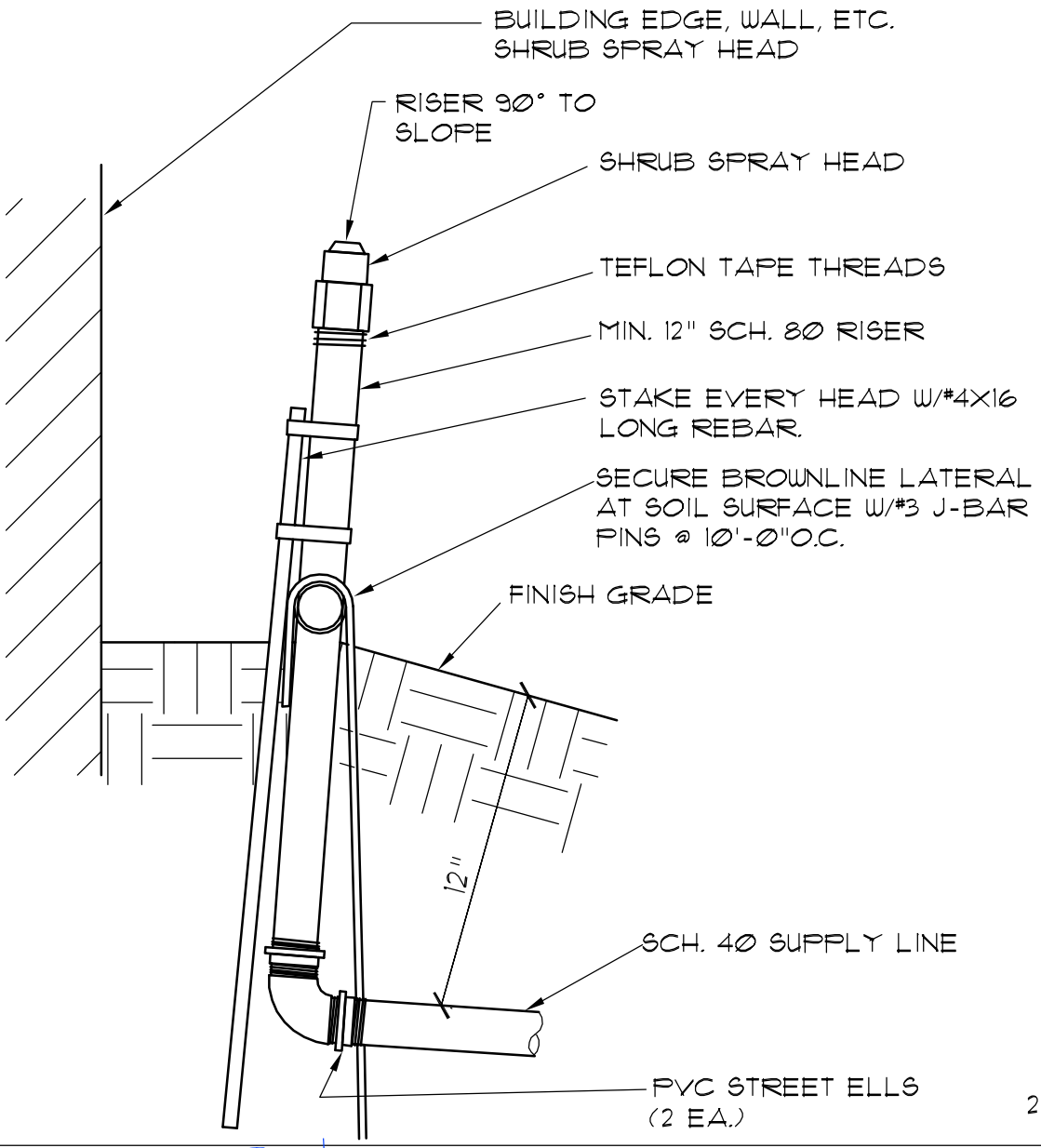

2/08

CITY OF PERRIS
CITY LANDSCAPE ARCHITECT
RON KAMMEYER

RISER ON SLOPE

I-16

CITY OF PERRIS

DEVELOPMENT SERVICES DEPARTMENT
PLANNING DIVISION
135 NORTH "D" STREET, PERRIS, CA. 92570-2200
TEL: (951) 943-5003 FAX(951) 943-8379

IRRIGATION DETAIL

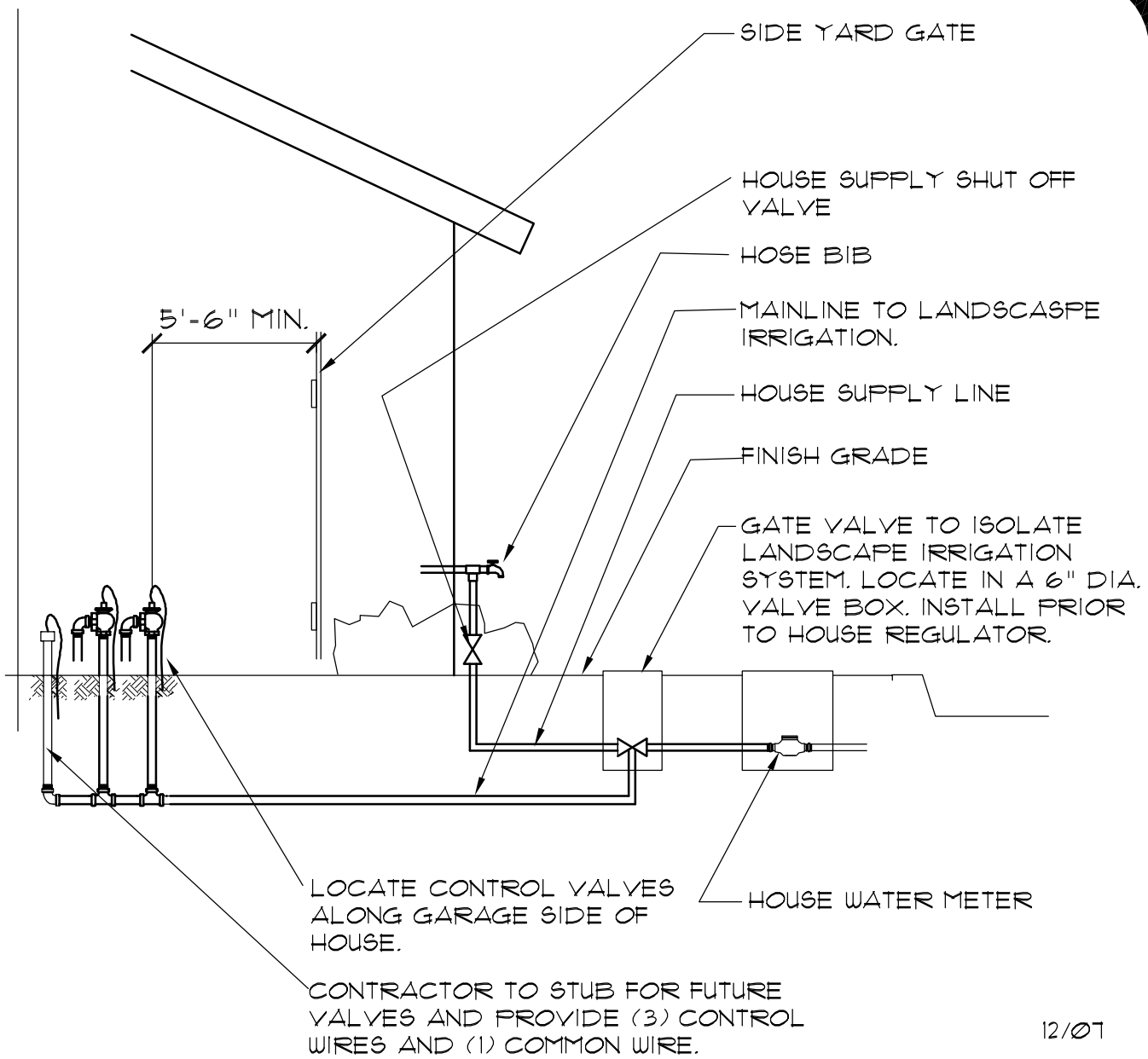

12/07

CITY OF PERRIS
CITY LANDSCAPE ARCHITECT

RON KAMMEYER

TYPICAL HOUSE CONNECTION

I-17

CITY OF PERRIS

DEVELOPMENT SERVICES DEPARTMENT
PLANNING DIVISION
135 NORTH "D" STREET, PERRIS, CA. 92570-2200
TEL: (951) 943-5003 FAX(951) 943-8379

IRRIGATION DETAIL

1. RECTUANGULAR PLASTIC VALVE BOX MARKED "MV" (2" HIGH LETTERS) W/LOCKING LID
2. PVC MALE ADAPTER
3. 4" NIPPLE
4. PVC MALE ADAPTER
5. FEMALE ADAPTER
6. 3/4" CRUSHED ROCK SLUMP 1 CU. FT. AT 6" DEPTH
7. 24" WIRE EXPANSION COILS. BUNDLE AND TAPE WIRES TO MAINLINE
8. EPOXY WIRE CONNECTORS AND CONTROL WIRES
9. FINISH GRADE

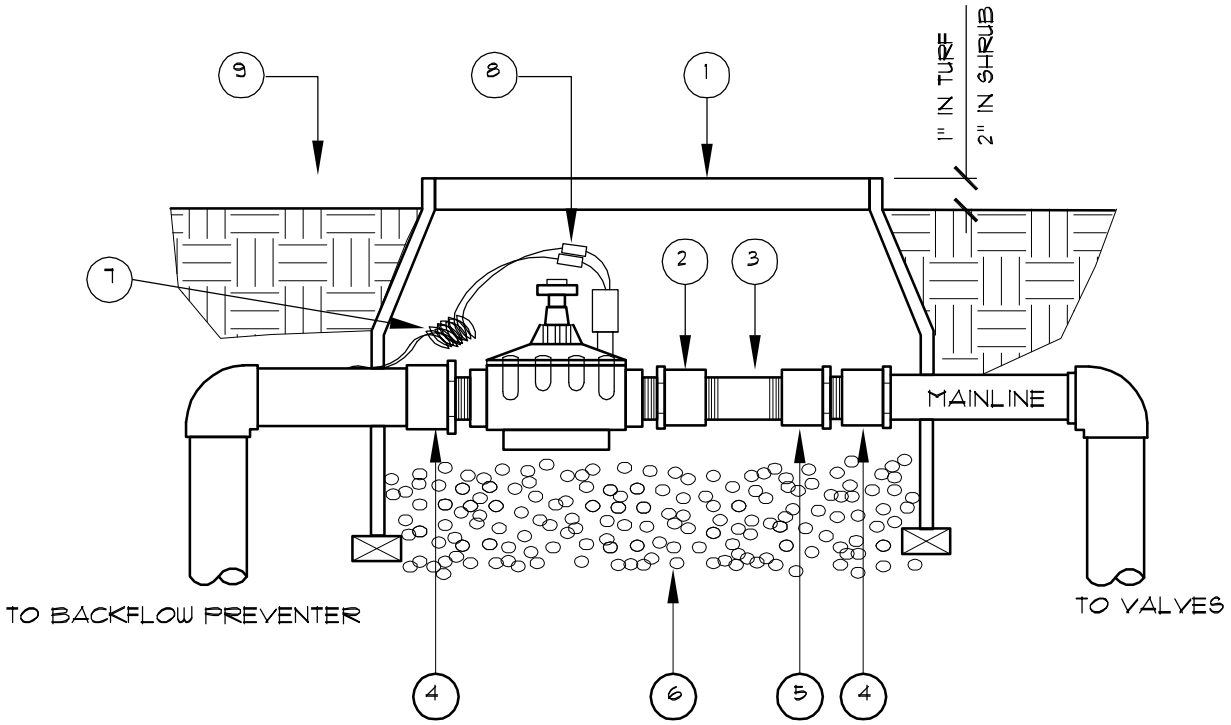

2/08

CITY OF PERRIS
CITY LANDSCAPE ARCHITECT
RON KAMMEYER

MASTER VALVE

I-18

CITY OF PERRIS

DEVELOPMENT SERVICES DEPARTMENT
PLANNING DIVISION
135 NORTH "D" STREET, PERRIS, CA. 92570-2200
TEL: (951) 943-5003 FAX(951) 943-8379

IRRIGATION DETAIL

1. FINISH GRADE
2. JUMBO VALVE BOX & COVER
3. CONTROL WIRES WITH 12" MIN. SERVICE COIL AND WATERPROOF WIRE SPLICE CONNECTORS - MARKED "FS" (2" HIGH LETTERS)
4. FLOW SENSOR
5. PVC 45 DEGREE ELL (TYP.)
6. MINIMUM 10x PIPE DIAMETER UPSTREAM & MINIMUM 5x PIPE DIAMETER DOWNSTREAM OF STRAIGHT PIPE
7. PVC 45 DEGREE ELL (TYP.) BUSH DOWN TO FLOW METER SIZE AS NECESSARY
8. PVC MAINLINE - LENGTH AS REQUIRED
9. 3/4" GRAVEL (1 CU. FT.)
10. CONTINUOUS BRICK SUPPORTS
11. VALVE BOX EXTENSIONS AS REQUIRED

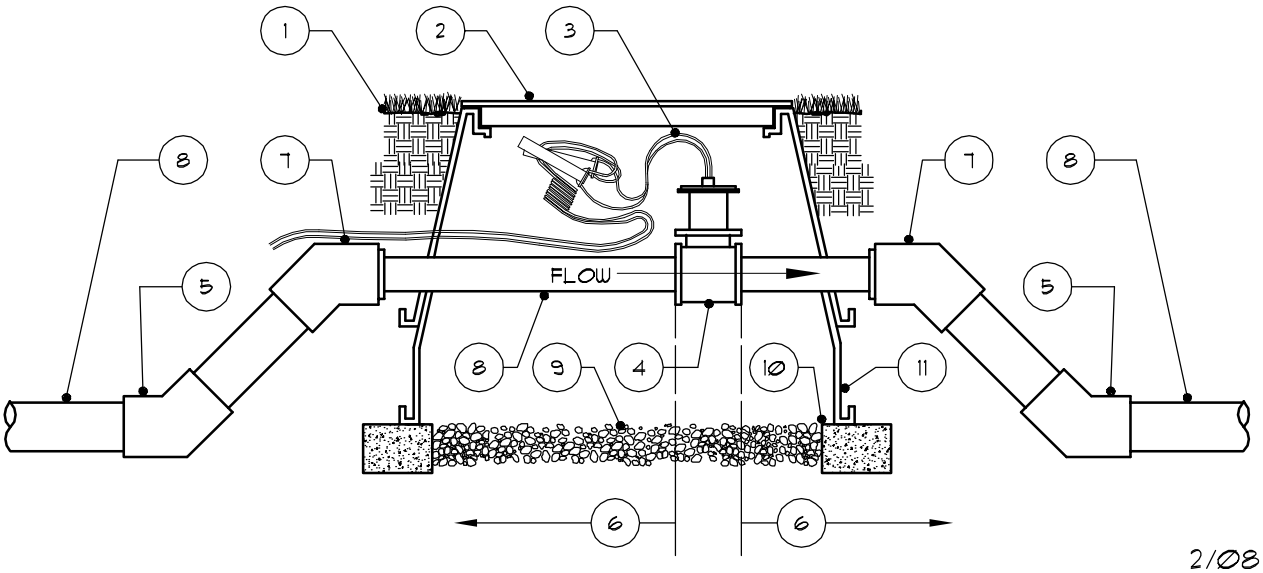

2/08

CITY OF PERRIS
CITY LANDSCAPE ARCHITECT
RON KAMMEYER

FLOW SENSOR

I-19

CITY OF PERRIS

DEVELOPMENT SERVICES DEPARTMENT
PLANNING DIVISION
135 NORTH "D" STREET, PERRIS, CA. 92570-2200
TEL: (951) 943-5003 FAX(951) 943-8379

IRRIGATION DETAIL

1. DISCHARGE FLANGED TEE
2. COMPANION FLANGE
3. PRESSURE GAUGE
4. PRESSURE GAUGE
5. BYPASS-2" MIN.
6. BUTTERFLY VALVE
7. FLOW SWITCH TO BE INSTALLED IN SECTION HEADER WIRED TO PUMP PANEL
8. FLANGED 90 COMBINATION PRESSURE REGULATING AND NON-SLAM CHECK VALVE
9. BAILEY #400 ACP OR CLA-VAL #91A
10. FLANGED CONCENTRIC REDUCER
11. PUMP & MOTOR
12. CONTROLLER (3 PHASE, 230 VOLT)
13. CONTROLLER SUPPORT
14. SEALTITE CONDUIT
15. SUPPORT LEG
16. 36"X42"X 20" SHEET METAL ENCLOSURE FOR EXTERIOR PUMP INSTALLATION
17. GALVANIZED STEEL SKID, WITH 4 9/16" HOLES
18. PRE-CAST CONCRETE PAD
19. RIGID STEEL CONDUIT TO POWER SOURCE

NOTES:

1) ENCLOSURE IS REQUIRED
2.) CONTRACTOR TO VERIFY AVAILABLE VOLTAGE COMPATIBLE WITH MOTOR SPECIFICATIONS

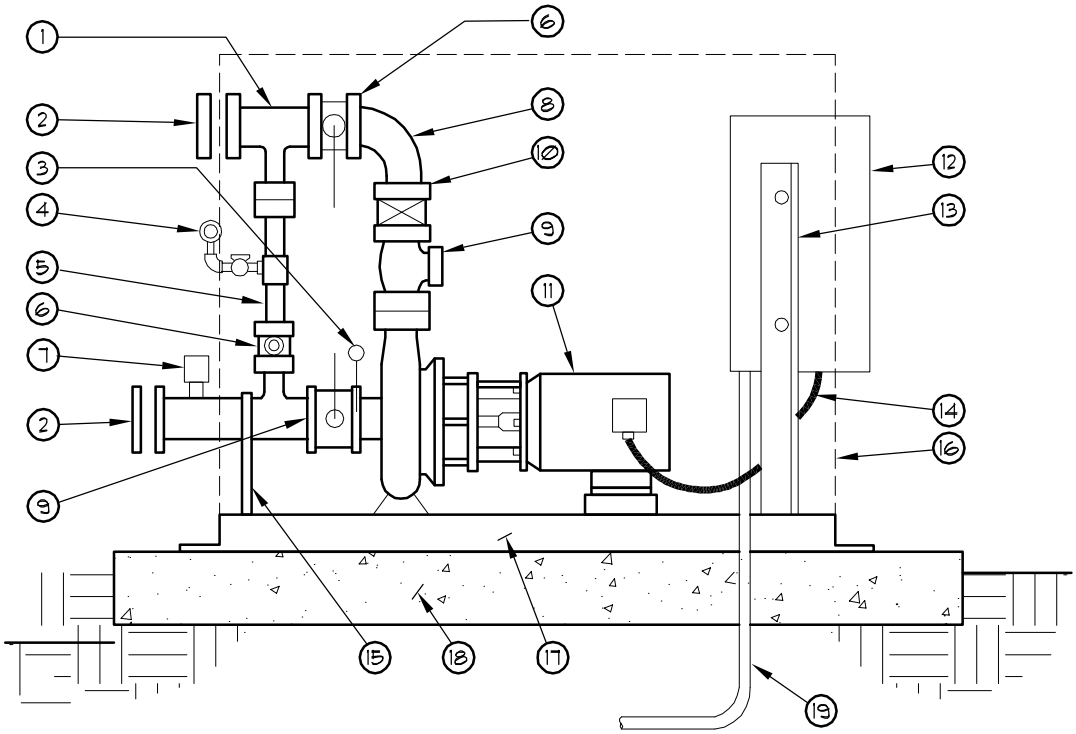

2/08

CITY OF PERRIS
CITY LANDSCAPE ARCHITECT

RON KAMMEYER

IRRIGATION BOOSTER PUMP

I-20

CITY OF PERRIS

DEVELOPMENT SERVICES DEPARTMENT
PLANNING DIVISION
135 NORTH "D" STREET, PERRIS, CA. 92570-2200
TEL: (951) 943-5003 FAX(951) 943-8379

IRRIGATION DETAIL

1. 1 1/2" - #9 EXPANDED METAL
2. 1 1/2"X1 1/2"X3/16" ANGLE FRAME
3. CONCRETE PAD
4. HASP FOR PAD LOCK
5. LIFTING HANDLE
6. HINGE PLATE

NOTES:

1) FINISH TO BE TWO COATS OF SEMI-GLOSS GREEN ENAMEL PAINT
2.) FOR UNITS 2" AND UNDER USE SINGLE SWING HINGE MODEL
3.) STAINLESS STEEL REQUIRED FOR ALL LANDSCAPE MAINTENANCE DISTRICT AREAS.

RP DEVICE SIZE	W	L	H	A
2 1/2"	24"	60"	36"	30"
3"-4"	30"	72"	42"	36"

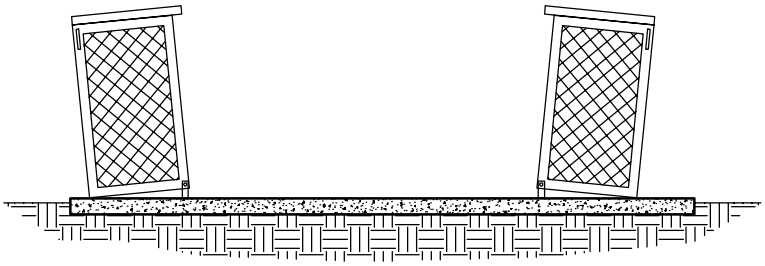

ENCLOSURE IN OPEN POSITION

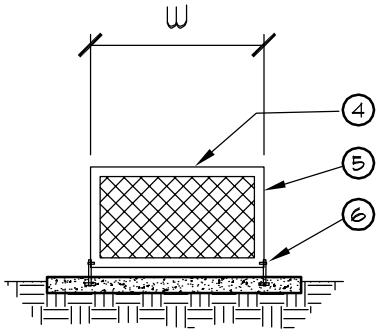

SIDE VIEW

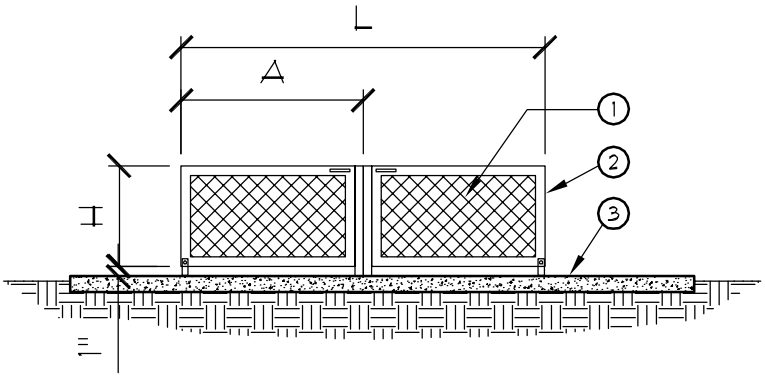

ENCLOSURE IN CLOSED POSITION

2/08

CITY OF PERRIS
CITY LANDSCAPE ARCHITECT
RON KAMMEYER

BACKFLOW PREV. ENCLOSURE

I-21

CITY OF PERRIS

DEVELOPMENT SERVICES DEPARTMENT
PLANNING DIVISION
135 NORTH "D" STREET, PERRIS, CA. 92570-2200
TEL: (951) 943-5003 FAX(951) 943-8379

IRRIGATION DETAIL

1. 10" ROUND VALVE BOX WITH LOCKING LID, "PR" TO BE BRANDED ON LID. USE VALVE BOX EXTENSIONSAS NECESSARY TO REACH FINISH GRADE
2. FINISH GRADE
3. PRESSURE ADJUSTMENT SCREW
4. PRESSURE REGULATOR
5. PIPE TO IRRIGATION SYSTEM
6. PIPE FROM BACKFLOW PREVENTER
7. 3/4" WASHED CRUSHED AGGREGATE BASE

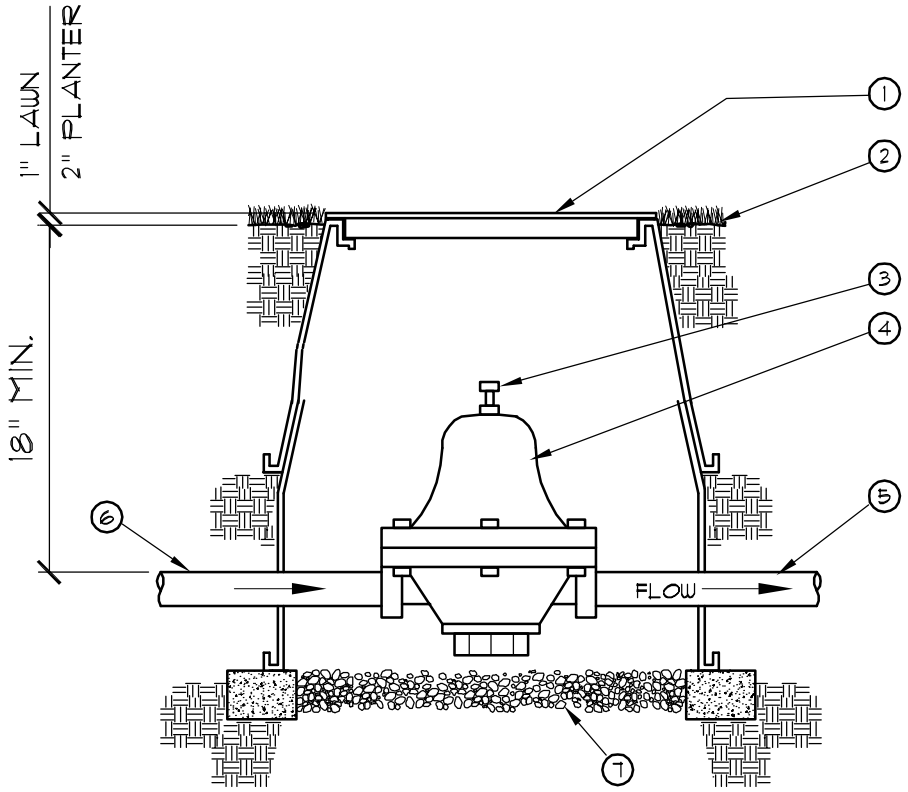

2/08

CITY OF PERRIS
CITY LANDSCAPE ARCHITECT
RON KAMMEYER

PRESSURE REDUCING VALVE

I-22

CITY OF PERRIS

DEVELOPMENT SERVICES DEPARTMENT
PLANNING DIVISION
135 NORTH "D" STREET, PERRIS, CA. 92570-2200
TEL: (951) 943-5003 FAX(951) 943-8379

IRRIGATION DETAIL

1. 10" ROUND PLASTIC VALVE BOX WITH LOCKING LID
   COVER SHALL BE MARKED "GV" VIA BRANDING

2. FINISH GRADE
3. BRASS GATE VALVE WITH BRONZE HAND WHEEL
4. 3/4" WASHED CRUSHED AGGREGATE BASE
5. SCH 80 PVC CLOSE NIPPLE
6. SCH 80 PVC UNION (FIPT x PIPT)
7. SCH 80 PVC TOE NIPPLE ASSEMBLY

NOTES:

1.) PLACE AGGREGATE PRIOR TO INSTALLATION OF VALVE BOX
2.) IF BALL VALVES ARE USED, A JUMBO RECTANGULAR BOX SHALL BE INSTALLED
3.) CAST IRON AND / OR FLANGED VALVES WILL REQUIRE A POURED-IN-PLACE CONCRETE SUPPORT (NOT SHOWN).

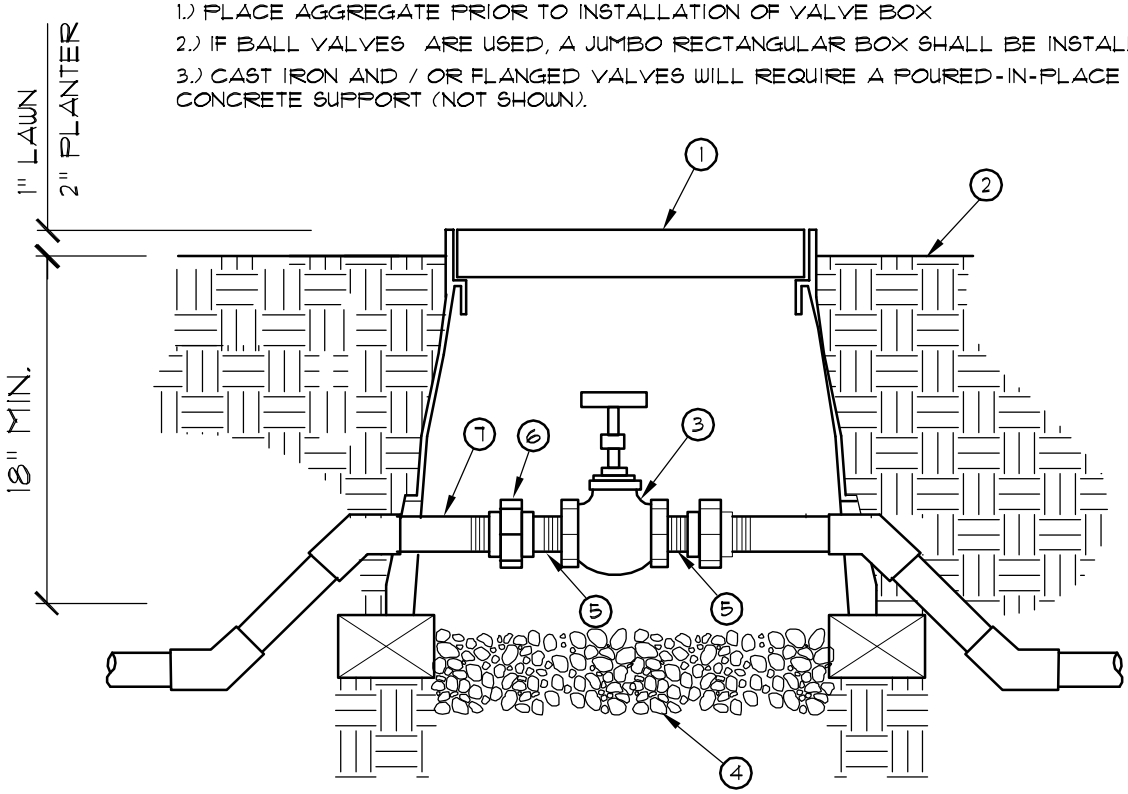

2/08

CITY OF PERRIS
CITY LANDSCAPE ARCHITECT
RON KAMMEYER

GATE VALVE

I-23

CITY OF PERRIS

DEVELOPMENT SERVICES DEPARTMENT
PLANNING DIVISION
135 NORTH "D" STREET, PERRIS, CA. 92570-2200
TEL: (951) 943-5003 FAX(951) 943-8379

IRRIGATION DETAIL

1. PLASTIC VALVE BOX WITH LOCKING LID BRANDED X-GV OR BV
2. PIG-TAIL COMMON WIRE (CONTINUOUS LOOP)
3. BRASS GATE VALVE - LINE SIZE
4. PIG-TAIL PILOT WIRE AND WATERPROOF END
5. FINISH GRADE
6. SUPPLY LINE SIZE PER PLAN
7. 3/4" WASHED CRUSHED GRAVEL
8. SCH 80 PVC UNION (FIPT x FIPT)
9. SCH 80 PVC TOE NIPPLE ASSEMBLY
10. SCH 80 45° ELBOW
11. SCH 80 PVC CLOSE NIPPLES
12. SCH 80 PVC CAP

NOTES:

1.) PLACE AGGREGATE PRIOR TO INSTALLATION OF VALVE BOX
2.) GATE VALVE TO REMAIN AT TIME OF INSTALLATION OF NEW REMOTE CONTROL VALVE BOX.

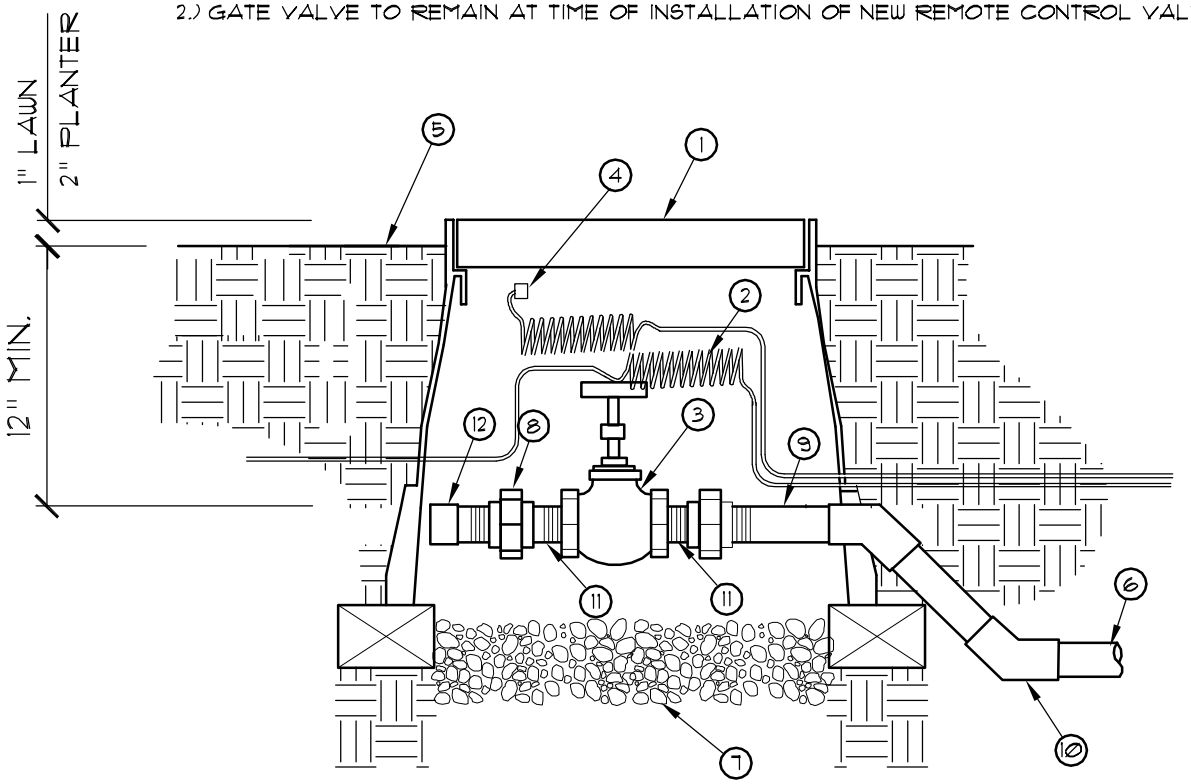

2/08

CITY OF PERRIS
CITY LANDSCAPE ARCHITECT
RON KAMMEYER

IRRIGATION STUB-OUT BOX

I-24

CITY OF PERRIS

DEVELOPMENT SERVICES DEPARTMENT
PLANNING DIVISION
135 NORTH "D" STREET, PERRIS, CA. 92570-2200
TEL: (951) 943-5003 FAX(951) 943-8379

LANDSCAPING DETAIL

1. HARDSCAPE SAFETY EDGE I.E. CONCRETE, STAMPED CONCRETE ETC.
2. CONCRETE CURB
3. FINISH GRADE
4. LATERAL LINE LOCATION SCHEDULE 40
5. MAIN LINE LOCATION

NOTES

1.) PIPES PLACED IN COMMON TRENCH SHALL HAVE A VERTICAL & HORIZONTAL OFFSET OF 3" MIN.

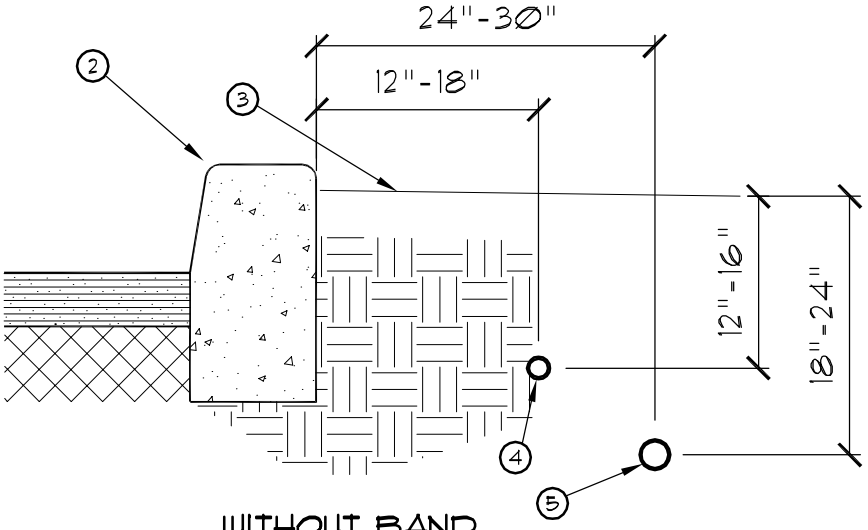

WITHOUT BAND

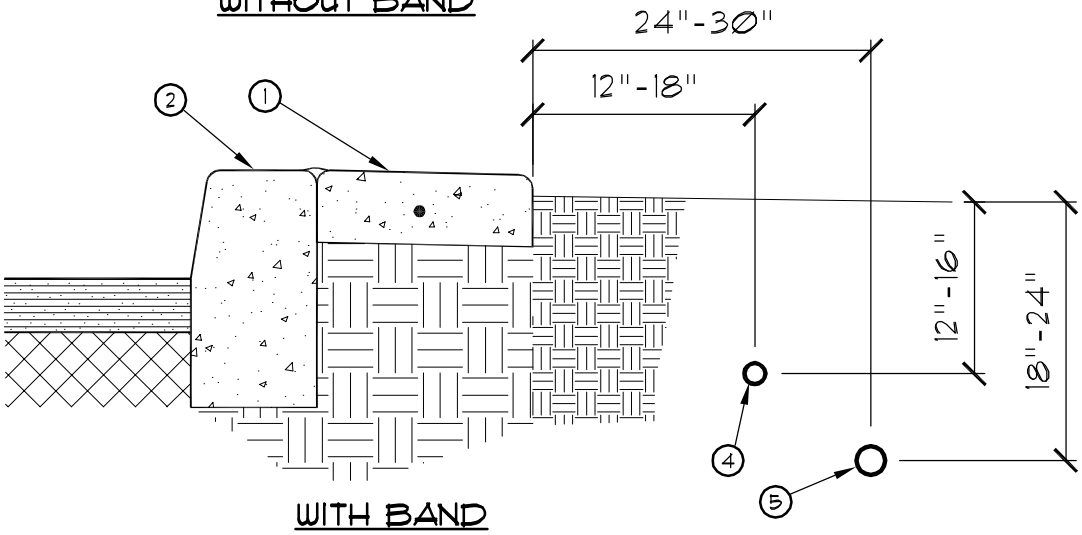

WITH BAND

REQUIRED MINIMUM ONE SIDE OF MEDIAN

2/08

CITY OF PERRIS
CITY LANDSCAPE ARCHITECT

RON KAMMEYER

MEDIAN SAFETY EDGE AND IRRIGATION LINE INSTALLATION

I-25

CITY OF PERRIS

DEVELOPMENT SERVICES DEPARTMENT
PLANNING DIVISION
135 NORTH "D" STREET, PERRIS, CA. 92570-2200
TEL: (951) 943-5003 FAX(951) 943-8379

IRRIGATION DETAIL

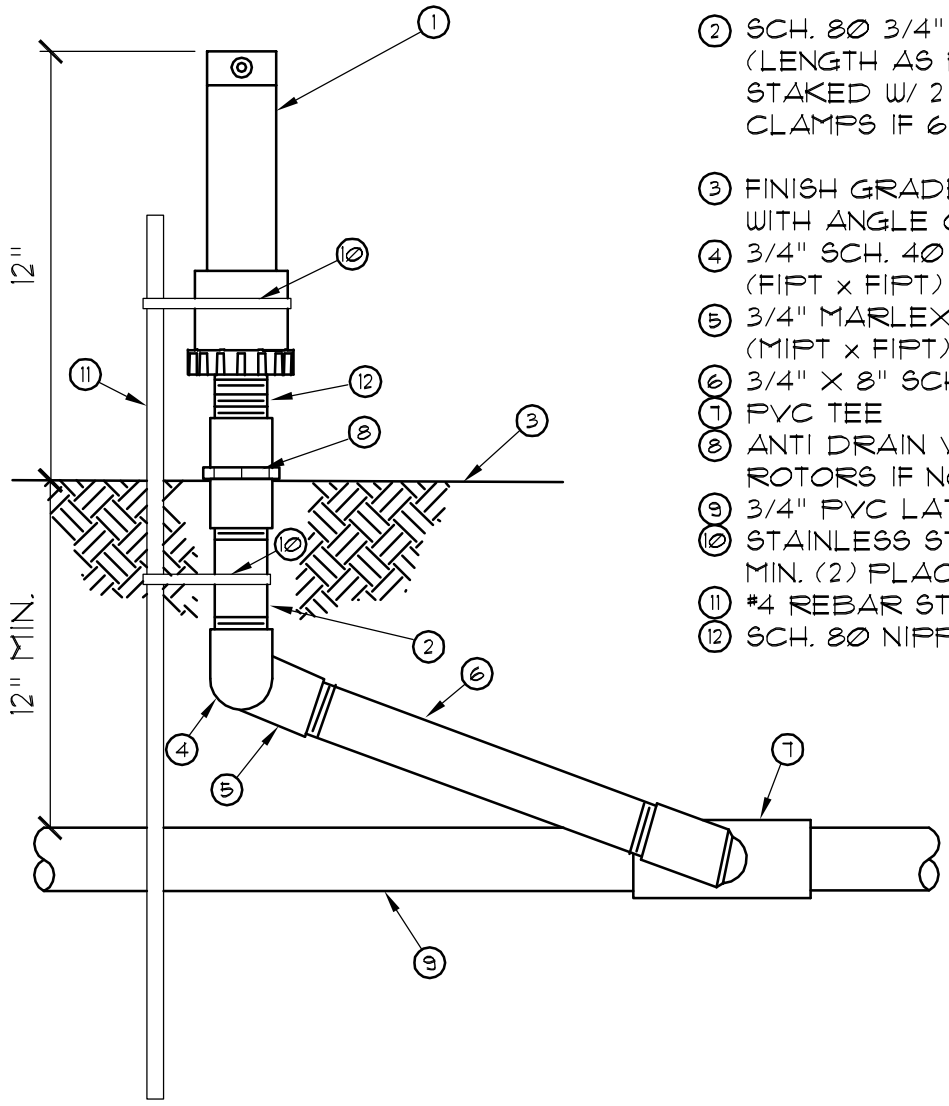

1. GEARED SHRUB MOTOR
2. SCH. 80 3/4" PVC RISER (LENGTH AS REQ'D) (REBAR STAKED W/ 2 STANLESS STEEL CLAMPS IF 6" OR MORE EXPOSURE)
3. FINISH GRADE (ALIGN HEAD PERP. WITH ANGLE OF SLOPE)
4. 3/4" SCH. 40 PVC 90° ELL (FIPT x FIPT)
5. 3/4" MARLEX 90° STREET ELL (MIPT x FIPT)
6. 3/4" X 8" SCH 80 NIPPLE
7. PVC TEE
8. ANTI DRAIN VALVE ON DOWN SLOPE ROTORS IF NOT FITTED IN BY MFG.
9. 3/4" PVC LATERAL LINE OR LARGER
10. STAINLESS STEEL SCREW, CLAMP MIN. (2) PLACES.
11. #4 REBAR STAKE (24" LONG)
12. SCH. 80 NIPPLE

12/07

CITY OF PERRIS
CITY LANDSCAPE ARCHITECT
RON KAMMEYER

ROTOR INSTALLATION ON FIXED RISER

I-26

CITY OF PERRIS

DEVELOPMENT SERVICES DEPARTMENT
PLANNING DIVISION
135 NORTH "D" STREET, PERRIS, CA. 92570-2200
TEL: (951) 943-5003 FAX(951) 943-8379

IRRIGATION DETAIL

1. TREE TRUNK
2. 2" LODGE POLE STAKES
3. FINISH GRADE: 2" BELOW TOP OF WALK
4. 6" POP-UP SPRINKLER WITH FLOOD BUBBLER INSERT
5. CONCRETE SIDEWALK
6. MARLEX COUBLE STREET ELLS (MIPT x FIPT)
7. LATERAL IRRIGATION LINE- THRU "CHIMNEY" - BOTH SIDES
8. 6"ΦX24" LG PERFORATED ABS DRAIN PIPE WITH 1/2" GRAVEL FILLED TO TOP OF ACT. PREFAB UNIT.
9. TREE PLANTING PIT WIDTH OF 2X ROOTBALL DIAMETER
10. PLANT TABLETS PER MANUF. SPECIFICATIONS (DISTRIBUTED AROUND ROOTBALL)
11. TEE AROUND PERIMETER OF TREE WELL.
12. UNDISTURBED NATIVE SOIL
13. INSTALL VERTICAL ROOT BARRIER PER MANUF. SPEC'S.
14. ROOTBALL
15. SCH 80 NIPPLE (LENGTH AS NECESSARY)
16. MULCH

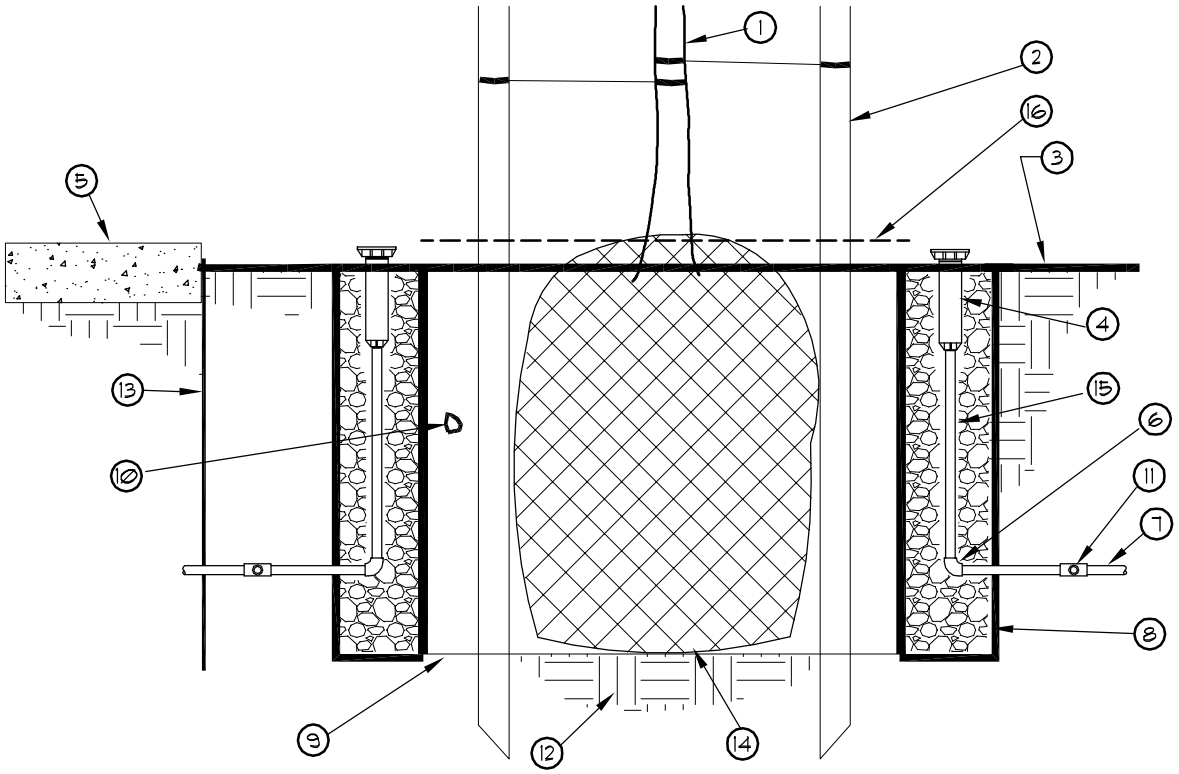

2/08

CITY OF PERRIS
CITY LANDSCAPE ARCHITECT
RON KAMMEYER

DEEP WELL TREE IRRIGATION: DRIP AND/OR BUBBLER

I-27

CITY OF PERRIS

DEVELOPMENT SERVICES DEPARTMENT
PLANNING DIVISION
135 NORTH "D" STREET, PERRIS, CA. 92570-2200
TEL: (951) 943-5003 FAX(951) 943-8379

IRRIGATION DETAIL

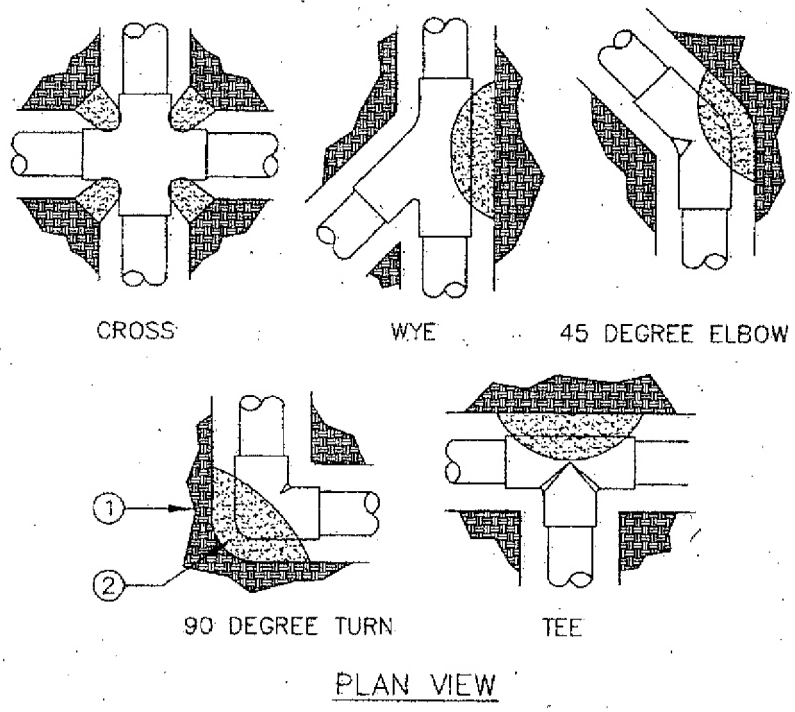

2/08

CITY OF PERRIS
CITY LANDSCAPE ARCHITECT
RON KAMMEYER

THRUST BLOCKS

I-28

CITY OF PERRIS

DEVELOPMENT SERVICES DEPARTMENT
PLANNING DIVISION
135 NORTH "D" STREET, PERRIS, CA. 92570-2200
TEL: (951) 943-5003 FAX(951) 943-8379

IRRIGATION DETAIL

LEGEND:
1- 20"x14" JUMBO RECTANGULAR VALVE BOX
2- 16"x11" STANDARD RECTANGULAR VALVE BOX
3- 10" DIA. ROUND VALVE BOX
4- EDGE OF AREA, CURB, WALK OR WALL

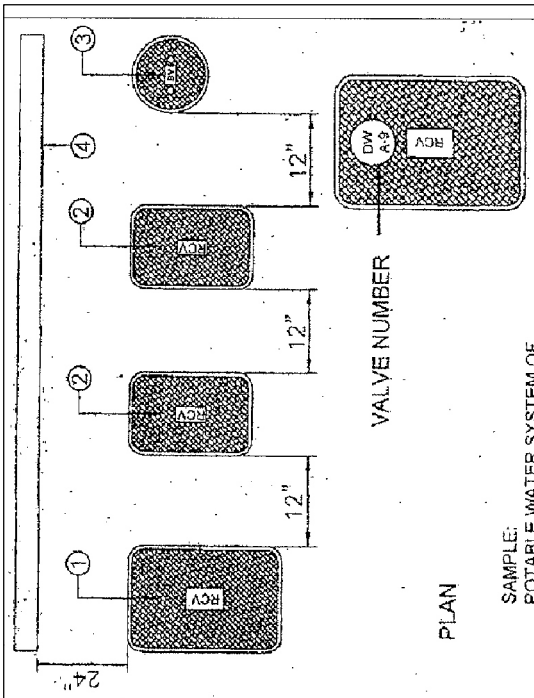

PLAN

SAMPLE:
POTABLE WATER SYSTEM OF
CONTROLLER "A" REMOTE CONTROL
VALVE ON STA. NO. 9

DOMESTIC WATER	RECLAIMED WATER	CONTROLLER LEGEND	EQUIPMENT DESIGNATION	IDENTIFICATION GUIDE
DW	RW	A	ARV	AIR RELIEF VALVE
DW	RW	A	BS	BASKET STRAINERS
DW	RW	A	BV	BALL VALVE
DW	RW	A	CCC	COMMUNICATION SPLICES
DW	RW	A	FS	FLOW SENSORS
DW	RW	A	FVA	FLUSH VALVE ASSEMBLY
DW	RW	A	GR	GROUNDING RODS
DW	RW	A	GV	GATE VALVES
DW	RW	A	MS	MOISTURE SENSORS
DW	RW	A	MV	MASTER VALVE
DW	RW	A	PB	PULL BOX
DW	RW	A	(STA NO.)	REMOTE CONTROL VALVES
DW	RW	A	QC	QUICK COUPLERS

CONTACT LANDSCAPE ARCHITECT FOR INFO
ON ANY DEVICE IN A BOX NOT LISTED.

NOTES:

A- VALVE BOXES SHALL BE LABELED BY HOT IRON BRANDING
B- CONTROL VALVES SHALL BE INSTALLED TO ALLOW ORDERLY ARRANGEMENT OF VALVE BOXES.
C- WHERE POSSIBLE LOCATE VALVE ASSEMBLIES IN SHRUB OR GROUNDCOVER AREAS ONLY 12" FROM HARDSCAPE.
D- LOCATION OF VALVE ASSEMBLIES SHALL BE STAKED FOR APPROVAL BY LANDSCAPE ARCHITECT PRIOR TO INSTALLATION.
E- CENTER VALVE BOXES OVER VALVE ASSEMBLE TO FACILITATE ACCESS AND MAINTENANCE.
F- SET VALVE BOXES AT EQUAL ELEVATIONS W/ TOPS AT 2" ABOVE FINISH GRADE IN SHRUB/ GROUNDCOVER AREAS.
G- VALVE BOXES SHALL BE SET PARALLEL TO EACH OTHER AND PERPENDICULAR TO EDGE OF AREA.
H- DO NOT DEFORM OR COLLAPSE VALVE BOX BY EXCESSIVE SOIL COMPACTION AROUND BOX.
I- SEE ALSO INDIVIDUAL VALVE INSTALLATION DETAILS.

2/08

CITY OF PERRIS
CITY LANDSCAPE ARCHITECT

RON KAMMEYER

BOX IDENTIFICATION

I-29

CITY OF PERRIS

DEVELOPMENT SERVICES DEPARTMENT
PLANNING DIVISION
135 NORTH "D" STREET, PERRIS, CA. 92570-2200
TEL: (951) 943-5003 FAX(951) 943-8379

IRRIGATION DETAIL

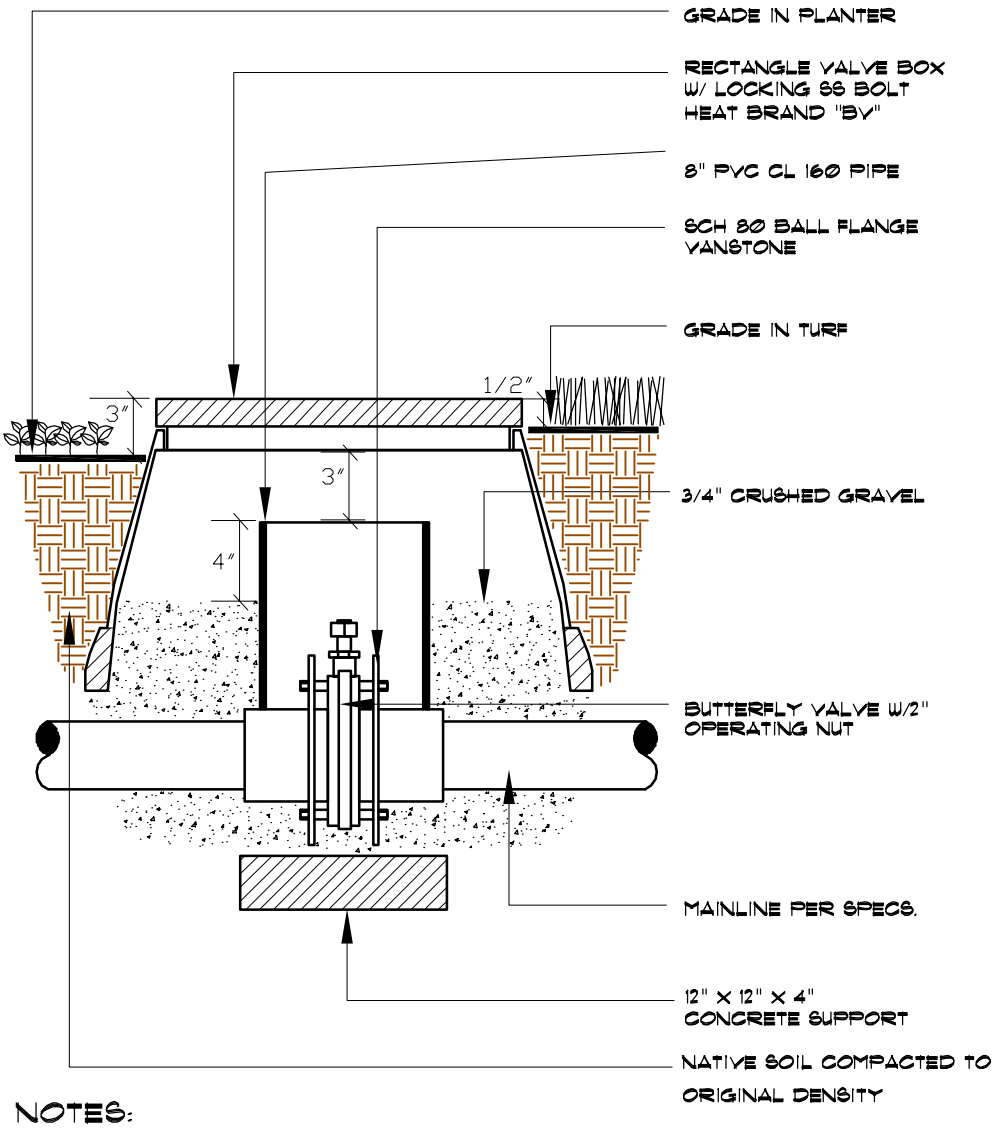

NOTES:

1. CONTRACTOR SHALL PROVIDE 5 FOOT TEE WRENCH WITH SQUARE NUT FOR BUTTERFLY VALVE OPERATION
2. PROVIDE 4 EA. CLAY BRICKS UNDER VALVE BOX (TYP.)

2/08

CITY OF PERRIS
CITY LANDSCAPE ARCHITECT

RON KAMMEYER

BUTTERFLY VALVE

I-30

CITY OF PERRIS

DEVELOPMENT SERVICES DEPARTMENT
PLANNING DIVISION
135 NORTH "D" STREET, PERRIS, CA. 92570-2200
TEL: (951) 943-5003 FAX(951) 943-8379

IRRIGATION DETAIL

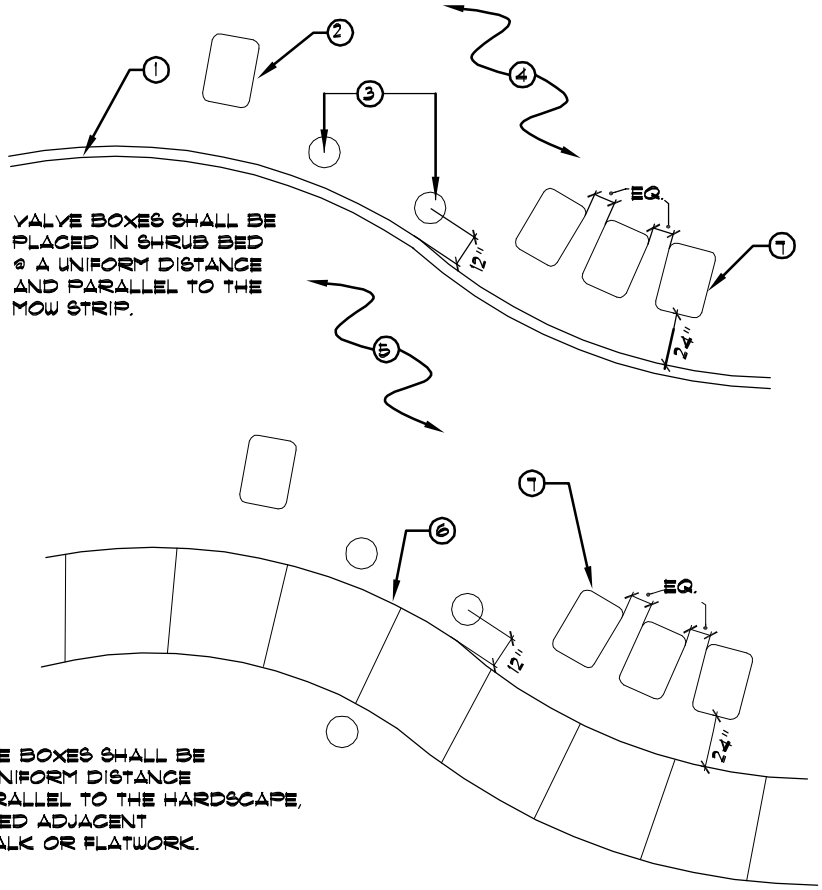

LEGEND

1. CONC MOW STRIP OR EDGING @ SHRUB / GROUNDCOVER BED EDGE PER PLAN.
2. RECTANGULAR VALVE BOX FOR CONTROL VALVES, FLOW SENSORS, MASTER VALVES.
3. ROUND VALVE BOX FOR QUICK COUPLERS, GATE OR BALL VALVE
4. SHRUB & GROUNDCOVER PLANTING AREA
5. TURF PLANTING AREA
6. CONC. WALK, PATHWAY OR FLATWORK PER PLAN.
7. WHEN POSSIBLE GROUP VALVES TOGETHER.

2/08

CITY OF PERRIS
CITY LANDSCAPE ARCHITECT
RON KAMMEYER

VALVE BOX PLACEMENT

I-31

CITY OF PERRIS

DEVELOPMENT SERVICES DEPARTMENT
PLANNING DIVISION
135 NORTH "D" STREET, PERRIS, CA. 92570-2200
TEL: (951) 943-5003 FAX(951) 943-8379

IRRIGATION DETAIL

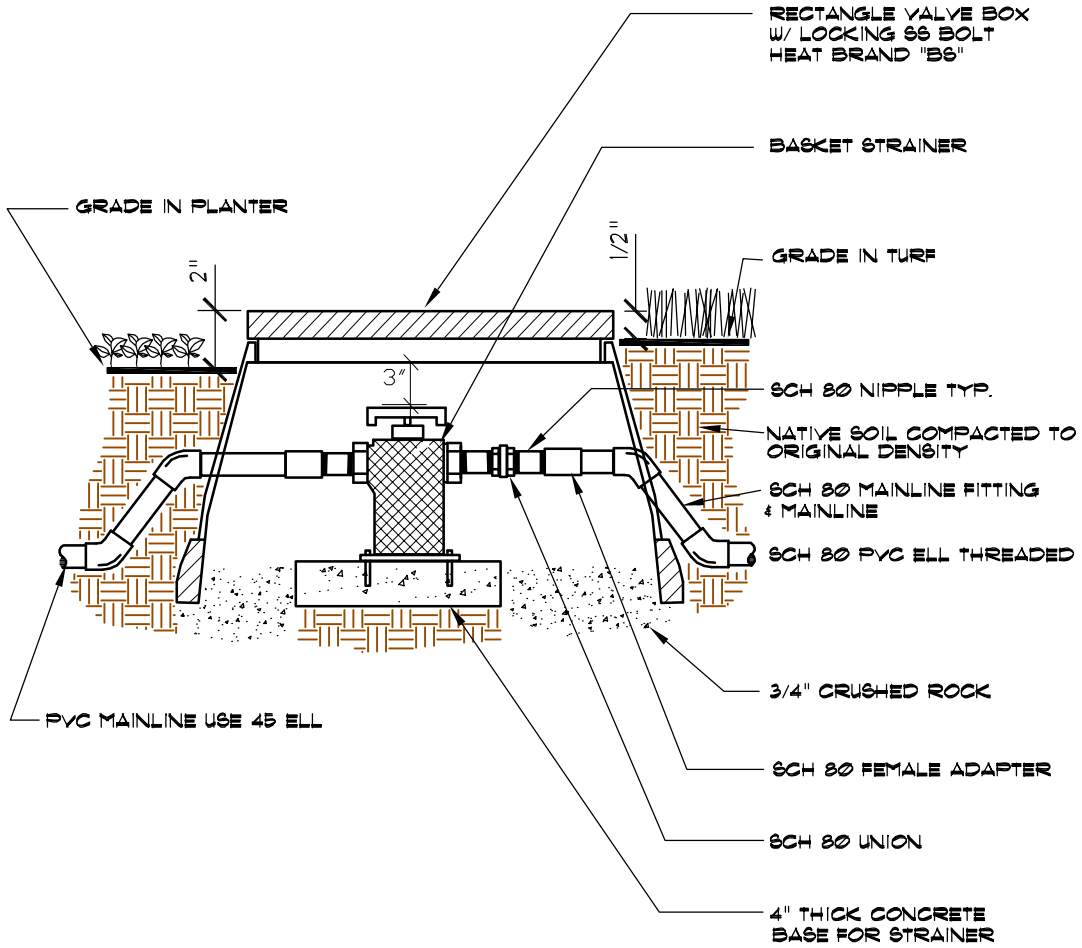

NOTES:

1. SECURE STRAINER TO PAD PER MANUFACTURER'S RECOMMENDATIONS

2. PROVIDE 4 EA. CLAY BRICKS UNDER VALVE BOX (TYP.)

2/08

CITY OF PERRIS
CITY LANDSCAPE ARCHITECT

RON KAMMEYER

BASKET STRAINER

I-32

CITY OF PERRIS

DEVELOPMENT SERVICES DEPARTMENT
PLANNING DIVISION
135 NORTH "D" STREET, PERRIS, CA. 92570-2200
TEL: (951) 943-5003 FAX(951) 943-8379

IRRIGATION DETAIL

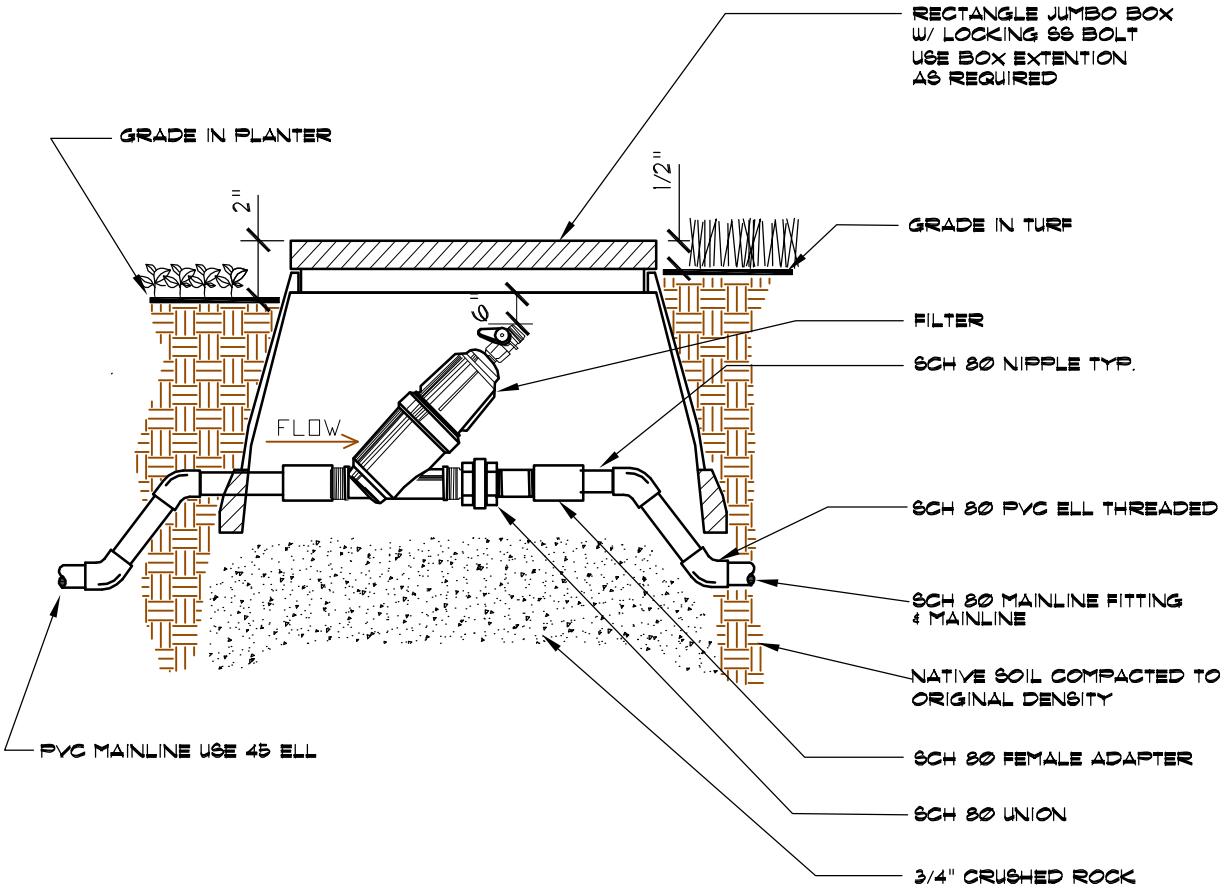

NOTES:

1. INSTALL FILTER DIRECTLY DOWNSTREAM OF BACKFLOW PER MANUFACTURER'S RECOMMENDATIONS
2. FILTER REQUIRED AT ALL POINT OF CONNECTIONS
3. PROVIDE 4 EA. CLAY BRICKS UNDER VALVE BOX (TYP.)

2/08

CITY OF PERRIS
CITY LANDSCAPE ARCHITECT
RON KAMMEYER

MAINLINE INLINE FILTER

I-33

CITY OF PERRIS

DEVELOPMENT SERVICES DEPARTMENT
PLANNING DIVISION
135 NORTH "D" STREET, PERRIS, CA. 92570-2200
TEL: (951) 943-5003 FAX(951) 943-8379

IRRIGATION DETAIL

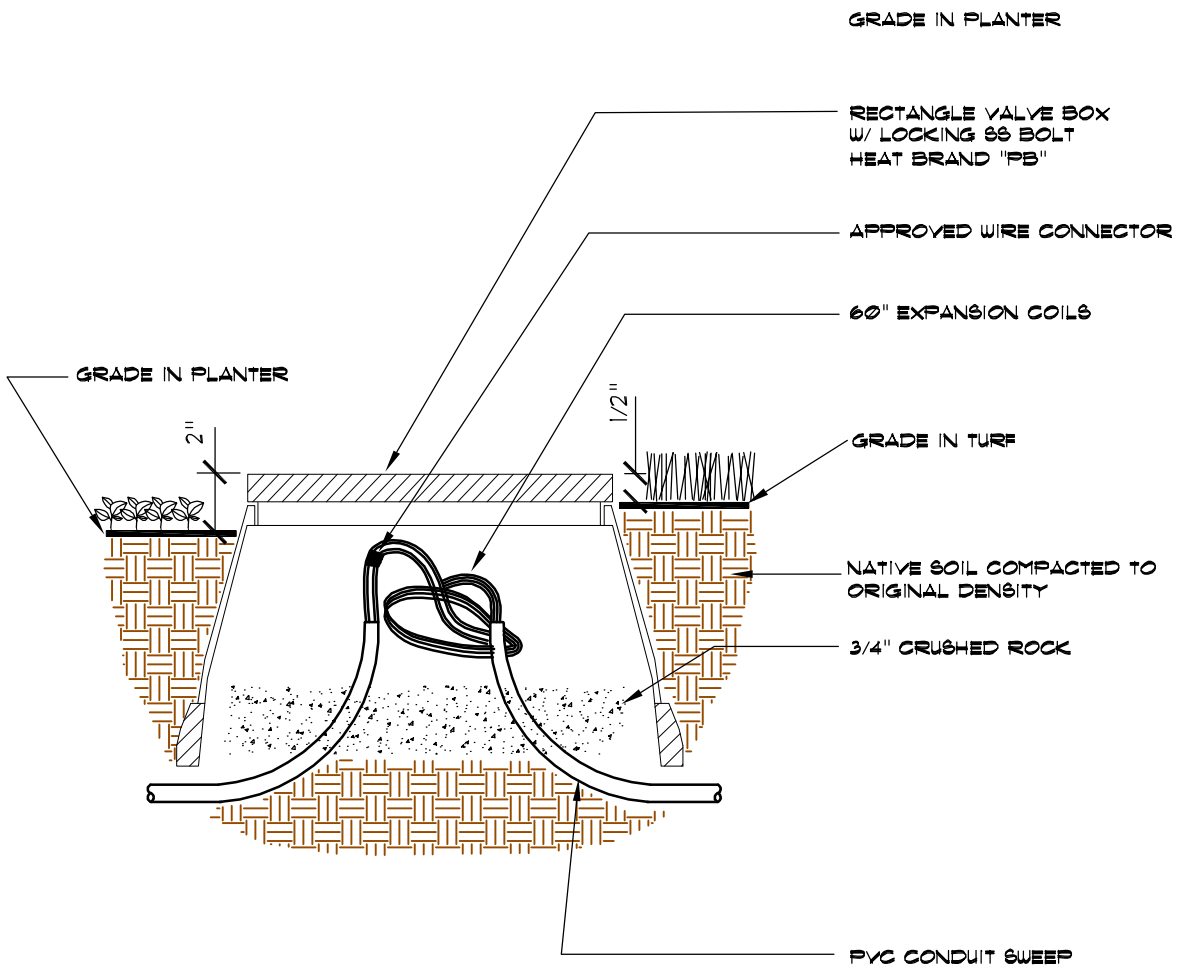

NOTES:

1. ALL WIRING MUST CONFORM TO LOCAL CODES
2. PROVIDE EXPANSION COILS AT EACH WIRE CONNECTION
3. PROVIDE 3" CLEARANCE BETWEEN WIRES & BOX
4. ELECTRICAL SWEEP OPEN END SHALL BE SEALED WITH EXPANSION FOAM
5. PROVIDE 4 EA. CLAY BRICKS UNDER VALVE BOX (TYP.)

2/08

CITY OF PERRIS
CITY LANDSCAPE ARCHITECT
RON KAMMEYER

PULL BOX

I-34

CITY OF PERRIS

DEVELOPMENT SERVICES DEPARTMENT
PLANNING DIVISION
135 NORTH "D" STREET, PERRIS, CA. 92570-2200
TEL: (951) 943-5003 FAX(951) 943-8379

IRRIGATION DETAIL

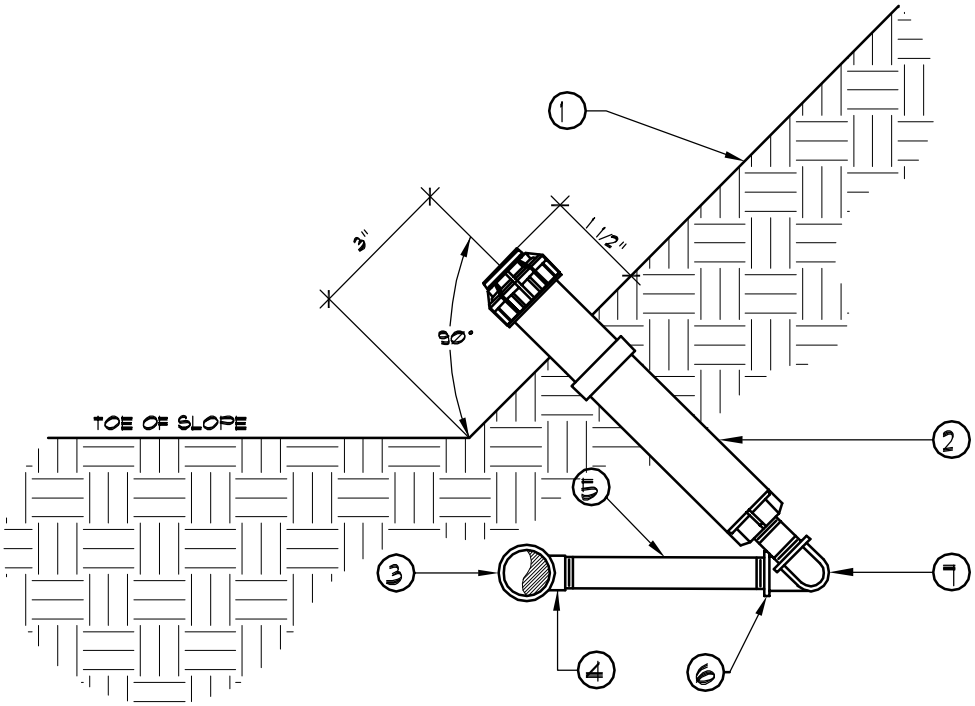

(TRIPLE SWING ASSEMBLY)

LEGEND

1. FINISH GRADE
2. POP-UP SPRAY/ ROTOR
3. PVC LATERAL
4. SCH.80 TEE OR ELBOW
5. SCH. 80 PVC NIPPLE- 6" MIN.
6. MARLEX 90 DEGREE STREET ELL
7. PVC 90 DEGREE ELL

2/08

CITY OF PERRIS
CITY LANDSCAPE ARCHITECT
RON KAMMEYER

HEAD AT TOE OF SLOPE

I-35

CITY OF PERRIS

DEVELOPMENT SERVICES DEPARTMENT
PLANNING DIVISION
135 NORTH "D" STREET, PERRIS, CA. 92570-2200
TEL: (951) 943-5003 FAX(951) 943-8379

IRRIGATION DETAIL

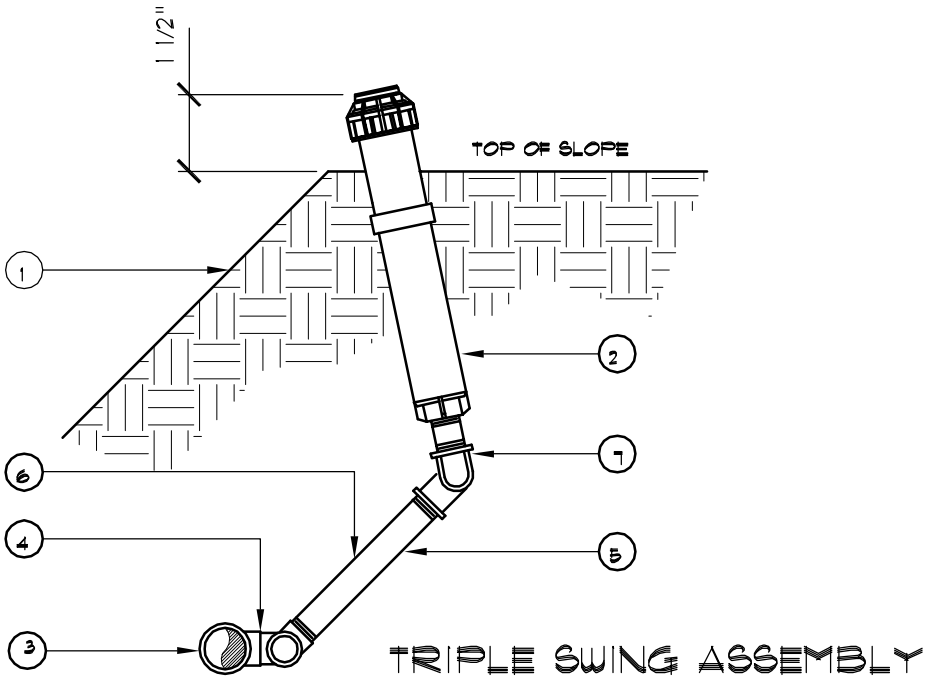

1. FINISH GRADE
2. POP-UP SPRAY/ ROTOR
3. PVC LATERAL
4. SCH 80 TEE OR ELBOW
5. SCH 80 PVC NIPPLE 6" MIN.
6. SCH 80 MARLEX 90 DEGREE STREET ELL
7. SCH 80 PVC 90° ELL

2/08

CITY OF PERRIS
CITY LANDSCAPE ARCHITECT
RON KAMMEYER

HEAD AT TOP OF SLOPE

I-36

CITY OF PERRIS

DEVELOPMENT SERVICES DEPARTMENT
PLANNING DIVISION
135 NORTH "D" STREET, PERRIS, CA. 92570-2200
TEL: (951) 943-5003 FAX(951) 943-8379

IRRIGATION DETAIL

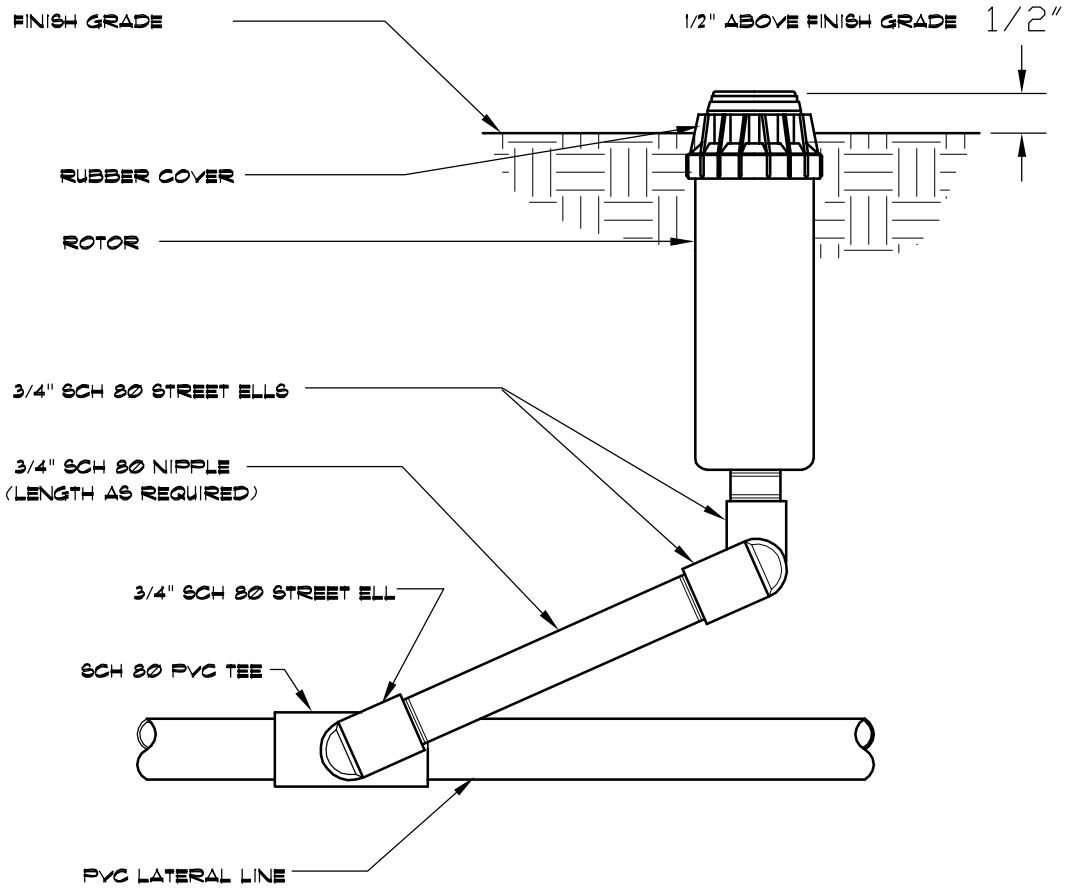

NOTES:

1. USE 3/4" TEFLON TAPE AT ALL SCH 40 ELLS
2. INSTALL HEAD PERPENDICULARLY PLUMB TO ADJACENT GRADE.
3. ADJUST NOZZLE TO PREVENT OVERSPRAY ONTO HARDSCAPE.
4. INSTALL HEADS 4" FROM HARDSCAPE EDGE IN TURF AREAS.
5. INSTALL HEADS 4" FROM HARDSCAPE EDGE IN PLANTER AREAS.
6. THE CONTRACTOR MAY SUBSTITUTE SWING JOINT ASSEMBLIES.

2/08

CITY OF PERRIS
CITY LANDSCAPE ARCHITECT
RON KAMMEYER

TURF ROTOR

I-37

CITY OF PERRIS

DEVELOPMENT SERVICES DEPARTMENT
PLANNING DIVISION
135 NORTH "D" STREET, PERRIS, CA. 92570-2200
TEL: (951) 943-5003 FAX(951) 943-8379

IRRIGATION DETAIL

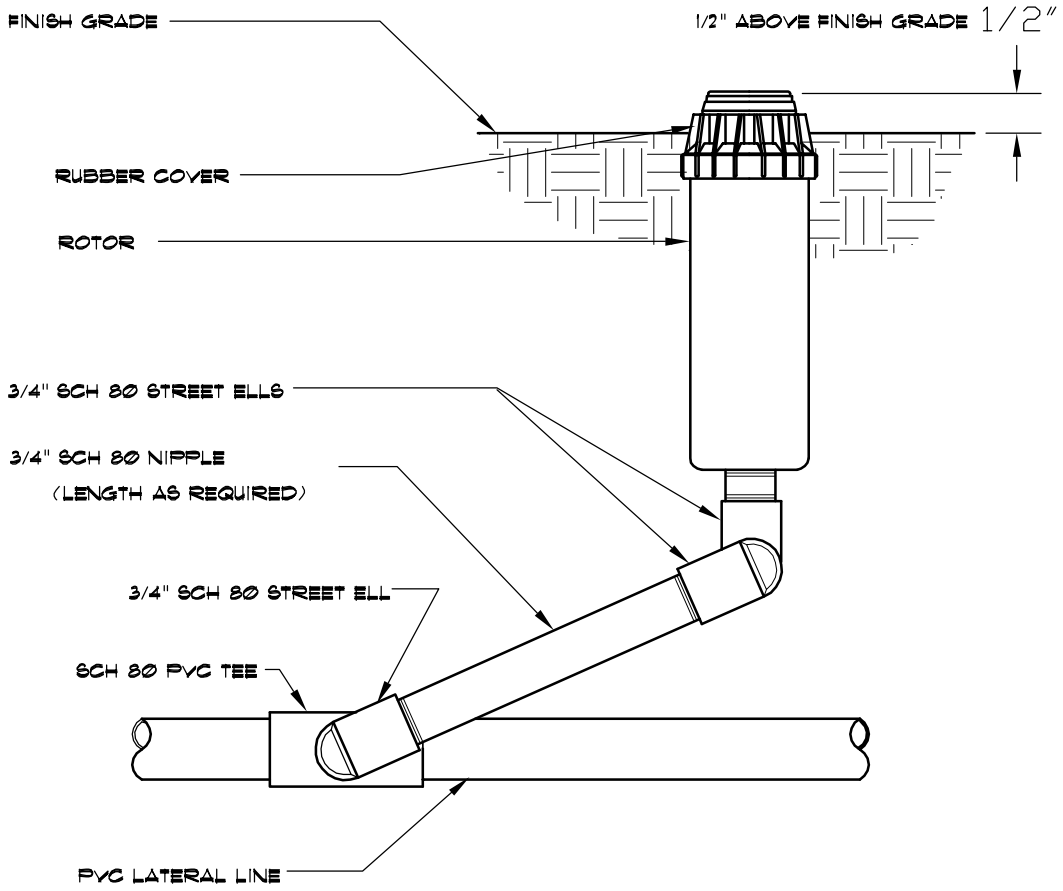

NOTES:

1. USE 3/4" TEFLON TAPE AT ALL SCH 40 ELLS
2. INSTALL HEAD PERPENDICULARLY PLUMB TO ADJACENT GRADE.
3. ADJUST NOZZLE TO PREVENT OVERSPRAY ONTO HARDSCAPE.
4. INSTALL HEADS 4" FROM HARDSCAPE EDGE IN TURF AREAS.
5. INSTALL HEADS 4" FROM HARDSCAPE EDGE IN PLANTER AREAS.
6. THE CONTRACTOR MAY SUBSTITUTE SWING JOINT ASSEMBLIES.

2/08

CITY OF PERRIS
CITY LANDSCAPE ARCHITECT

RON KAMMEYER

SPORTS FIELD ROTOR

I-38