SHOTCRETE SPECIFICATIONS

PART 1- GENERAL

1.1 SUMMARY

A. SPECIALTY CONSTRUCTION:

A.A. DESCRIPTION: SHOTCRETE APPLICATION, CUTTING, SCULPTING AND FINISH WORK HAS BEEN DEEMED AS SPECIALTY CONSTRUCTION WORK WITHIN THE CONSTRUCTION DOCUMENTS. ALL WORK RELATED TO THE SPECIALTY CONSTRUCTION SHALL BE COORDINATED BY THE PROJECT ENGINEER, AND THE PRE-QUALIFIED SPECIALTY CONTRACTOR, PRIOR TO THE START OF CONSTRUCTION.

1.2 QUALITY ASSURANCE

A. STANDARDS: COMPLY WITH THE REQUIREMENTS OF THE CURRENT EDITION OF THE FOLLOWING CODES AND STANDARDS, EXCEPT AS HEREIN MODIFIED:

A.A. AMERICAN CONCRETE INSTITUTE (ACI): 506, CHAPTER 13, WET METHOD. CHAPTER 5, SHOTCRETE CREW

A.B. ASTM: "AMERICAN SOCIETY FOR TESTING MATERIALS"

1.3 REFERENCE STANDARDS

A. ACI 305- RECOMMENDED PRACTICE FOR HOT WEATHER CONCRETING.

B. ACI 306- RECOMMENDED PRACTICE FOR COLD WEATHER CONCRETING.

C. ASTM C33- CONCRETE AGGREGATES

D. ASTM C94- READY-MIXED CONCRETE

E. ASTM C143- TEST FOR SLUMP OF PORTLAND CEMENT CONCRETE

F. ASTM C150- PORTLAND CEMENT

G. ASTM C260- AIR-ENTRAINING ADMIXTURES FOR CONCRETE

H. ASTM C494- CHEMICAL ADMIXTURES FOR CONCRETE

I. ASTM C618- FLY ASH AND RAW OR CALCINED NATURAL POZZOLANS FOR USE IN PORTLAND CEMENT CONCRETE.

1.4 JOB CONDITIONS

A. COORDINATION:

A.A. COORDINATE SCHEDULES OF CONCRETE WORK TO ALLOW ADEQUATE TIME FOR INSTALLATION OF OTHER RELATED WORK.

A.B. VERIFY THAT ANCHOR BOLTS AND OTHER EMBEDDED STEEL ITEMS TO BE CAST INTO CONCRETE ARE PROPERLY PLACED.

A.C. COORDINATE EARTHWORK AND SOILS REPORT RECOMMENDATIONS WITH PLACEMENT REQUIREMENTS.

A.D. COORDINATE WITH FORM-WORK AND FINISHES SECTIONS TO PROVIDE FINISH FLOORLEVELNESS AND FLATNESS AS SPECIFIED HEREIN. SLOPE TO DRAINS AT GRADES AND PERCENT SLOPE SHOWN IN THE CONSTRUCTION DRAWINGS.

PART 2- SHOTCRETE WORK

2.1 SHOTCRETE MIX DESIGN

A. PROVIDE MIX DESIGNS THAT WILL MEET THE MINIMUM REQUIREMENTS LISTED HEREIN:

A.A. MINIMUM 28-DAY STRENGTH: 4000 PSI

A.B. TYPE I/II CEMENT

A.C. SMALL AGGREGATE (1/2" MAX.)

A.D. WATER/CEMENT RATIO OF .45 OR LESS

A.E. AIR ENTRAINMENT NOT TO EXCEED 3%

B. MIX DESIGNS FOR SHOTCRETE CONTAINING FLY ASH: THE AMOUNT OF FLY ASH USED SHALL NOT EXCEED 20% BY WEIGHT OF THE COMBINED WEIGHT OF FLY ASH PLUS CEMENT.

2.2 CONCRETE APPLICATION EQUIPMENT

A. FOR WET MIX SHOTCRETE:

A.A. MIXING EQUIPMENT: CAPABLE OF THOROUGHLY MIXING AGGREGATE, CEMENT AND WATER IN SUFFICIENT QUANTITY TO MAINTAIN CONTINUOUS PLACEMENT.

A.B. AIR SUPPLY: CLEAN AIR ADEQUATE FOR MAINTAINING SUFFICIENT NOZZLE VELOCITY FOR PARTS OF WORK, AND FOR SIMULTANEOUS OPERATION OF BLOW PIPE FOR CLEANING AWAY REBOUND.

A.C. DELIVERY EQUIPMENT: CAPABLE OF DISCHARGING AGGREGATE-CEMENT-WATER MIXTURE ACCURATELY, UNIFORMLY, AND CONTINUOUSLY THROUGH DELIVERY HOSE.

PART 3- EXECUTION

3.1 INSPECTION

A. EXAMINATION: EXAMINE CONCRETE FORMWORK AND VERIFY THAT IT IS TRUE TO LINE AND DIMENSION, ADEQUATELY BRACED AGAINST VIBRATION, AND CONSTRUCTED TO PERMIT ESCAPE OF AIR AND REBOUND BUT TO PREVENT LEAKAGE DURING SHOTCRETING. CORRECT DEFICIENCIES.

B. NOTIFICATION: NOTIFY OTHER TRADES INVOLVED IN AMPLE TIME TO PERMIT THE PROPER INSTALLATION OF THEIR WORK. COOPERATE IN SETTING SUCH WORK.

C. EXISTING SURFACES: EXAMINE EXISTING CONCRETE SURFACES FOR UNSOUND MATERIAL. CORRECT DEFICIENCIES.

3.2 PREPARATION FOR INSTALLATION OF CONCRETE

A. FORMS: USE A FORM-COATING MATERIAL ON REMOVABLE FORMS TO PREVENT ABSORPTION OF MOISTURE AND TO PREVENT BOND WITH SHOTCRETE.

3.3 CONCRETE BATCHING AND MIXING

A. PROPORTIONS: MIX PROPORTIONS SHALL BE CONTROLLED BY WEIGHT BATCHING.

B. SCHEDULING: CONCRETE SHALL NOT EXCEED A TEMPERATURE OF 100 DEGREES FAHRENHEIT AT TIME OF PLACEMENT UNLESS PRE-APPROVED BY THE PROJECT ENGINEER.

3.4 CONCRETE PLACEMENT

A. PLACEMENT: USE SUITABLE DELIVERY EQUIPMENT AND PROCEDURES THAT WILL RESULT IN SHOTCRETE IN PLACE MEETING THE REQUIREMENTS OF THIS SPECIFICATION. DETERMINE OPERATING PROCEDURES FOR PLACEMENT IN, EXTENDED DISTANCES, AND AROUND ANY OBSTRUCTIONS WHERE PLACEMENT VELOCITIES AND MIX CONSISTENCY MUST BE ADJUSTED.

B. PLACEMENT TECHNIQUES:

B.A. CONTROL THICKNESS, METHOD OF SUPPORT, AIR PRESSURE, AND/OR WATER CONTENT OF SHOTCRETE TO PRECLUDE SAGGING OR SLOUGHING OFF. DISCONTINUE SHOTCRETING OR PROVIDE SUITABLE MEANS TO SCREEN THE NOZZLE STREAM IF WIND OR AIR CURRENTS CAUSE SEPARATION OF THE NOZZLE STREAM DURING PLACEMENT.

B.B. HOLD NOZZLE AS PERPENDICULAR TO SURFACE AS WORK WILL PERMIT, TO SECURE MAXIMUM COMPACTION WITH MINIMUM REBOUND.

B.C. IN SHOTCRETING WALLS, BEGIN APPLICATION AT BOTTOM. ENSURE WORK DOES NOT SAG.

B.D. LAYERING:

B.D.A. BUILD UP LAYERS BY MAKING SEVERAL PASSES OF NOZZLE OVER WORK AREA.

B.D.B. MAKE SURE SURFACE IS ADEQUATELY ROUGH TO WHICH, AFTER HARDENING, ADDITIONAL LAYERS OF SHOTCRETE ARE TO BE BONDED.

B.D.C. DAMPEN SURFACE (ACHIEVE SATURATED SURFACE DRY (SSD) CONDITION) JUST PRIOR TO APPLICATION OF SUCCEEDING LAYERS.

B.D.D. ALLOW EACH LAYER OF SHOTCRETE TO TAKE INITIAL SET BEFORE APPLYING SUCCEEDING LAYERS.

B.D.E. USE RADIAL TEMPLATES TO INSURE EXACT RADII FROM FLAT BOTTOM OF BOWL/PIPE TO FACE OF COPING. TEMPLATE SHALL BE FABRICATED FROM STEEL OR 3/4" MINIMUM PLYWOOD. CHECK EVERY HORIZONTAL FOOT WHEN APPLYING SHOTCRETE FOR CONFORMANCE OF INTENDED WALL RADII. BRACE TEMPLATE AND PLACE LEVELS AT ARC TO TANGENT CONNECTIONS TO INSURE NO KINKS WILL BE FORMED. KINKS AT THE BOTTOM OF BOWLS WILL NOT BE ACCEPTABLE. SLUMPING OF THE SHOTCRETE CAUSING COPING SETBACK WILL NOT BE ACCEPTABLE.

B.D.F. REMOVE ANY REBOUND OR ACCUMULATED LOOSE AGGREGATE FROM SURFACES TO BE COVERED PRIOR TO PLACING THE INITIAL OR ANY SUCCEEDING LAYERS OF SHOTCRETE. REBOUND SHALL NOT BE USED AS AGGREGATE.

B.E. PLACEMENT AROUND REINFORCEMENT:

B.E.A. HOLD THE NOZZLE AT SUCH DISTANCE AND ANGLE TO PLACE MATERIALS BEHIND REINFORCEMENT BEFORE ANY MATERIAL IS ALLOWED TO ACCUMULATE ON ITS FACE.

B.F. ACCESS: ALLOW EASY ACCESS TO SHOTCRETE SURFACES FOR SCREEDING AND FINISHING, PERMITTING UNINTERRUPTED APPLICATION.

3.14 REMOVAL OF SURFACE DEFECTS IN CONCRETE

A. GENERAL: REMOVE AND REPLACE SHOTCRETE WHICH LACKS UNIFORMITY, EXHIBITS SEGREGATION, HONEYCOMBING, OR LAMINATION, OR WHICH CONTAINS ANY DRY PATCHES, SLUGS, VOIDS OR POCKETS. REMOVE DEFECTIVE AREAS.

3.15 SHOTCRETE FINISH

A. FINISH: ALL EXPOSED SHOTCRETE SURFACES ARE TO BE HARD STEEL TROWEL FINISH UNLESS OTHERWISE NOTED. TROWEL UNTIL ALL VISIBLE POURS ARE CLOSED. CEASE TROWEL BEFORE GLASS FORMS ON SURFACE. DO NOT BROOM FINISH AND DO NOT BURN SURFACE.

B. GRINDING THE SURFACES WILL NOT BE AN ACCEPTABLE MEANS OF ACHIEVING THE INTENDED RADII/ANGLE.

C. COLOR: ALL SHOTCRETE SURFACES ARE TO BE NATURAL GRAY COLOR UNLESS OTHERWISE NOTED. MINOR VARIATIONS IN APPEARANCE OF COLORED CONCRETE, WHICH ARE SIMILAR TO NATURAL VARIATIONS IN COLOR AND APPEARANCE OF UNCOLORED CONCRETE, ARE ACCEPTABLE. DO NOT BROOM FINISH AND DO NOT TROWEL BURN SURFACE.

D. DURING THE CURING PERIOD, CONCRETE SHALL BE MAINTAINED AT A TEMPERATURE ABOVE 40 DEGREES FAHRENHEIT AND IN MOIST CONDITION. FOR INITIAL CURING, CONCRETE SHALL BE KEPT CONTINUOUSLY MOIST FOR 24 HOURS AFTER PLACEMENT IS COMPLETE. FINAL CURING SHALL CONTINUE FOR SEVEN DAYS AFTER PLACEMENT. COVER CONCRETE WITH POLYETHYLENE PLASTIC TO MAINTAIN TEMPERATURE IF NECESSARY. LAP SEAMS IN THE PLASTIC 6" AND WEIGH DOWN.

E. THE CONTRACTOR SHALL FIX ALL CRACKS AND DISPLACEMENTS LARGER THAN 3/16" UP TO THE PROJECT COMPLETION.

3.16 CONCRETE PROTECTION AND CURING

1. NERAL: PROTECT FRESHLY PLACED CONCRETE FROM PREMATURE DRYING AND EXCESSIVE COLD OR HOT TEMPERATURES. COMPLY WITH ACI 306.1 FOR COLD-WEATHER PROTECTION AND FOLLOW RECOMMENDATIONS IN ACI 305R FORHOT-WEATHER PROTECTION DURING CURING. KEEP MOIST FOR NECESSARY AMOUNT OF TIME TO REACH CONCRETE STRENGTH AND INHIBIT MOISTURE LOSS AFTER PLACING.
2. EVAPORATION RETARDANT: WATERBORNE, MONOMOLECULAR FILM FORMING, MANUFACTURED FOR APPLICATION TO FRESH CONCRETE, SUCH AS EUCOBAR EVAPORATION RETARDANT BY THE EUCLID CHEMICAL COMPANY. APPLY EVAPORATION RETARDANT TO CONCRETE SURFACES IF HOT, DRY, OR WINDY CONDITIONS CAUSE MOISTURE LOSS BEFORE AND DURINGFINISHING OPERATIONS. APPLY TO EXPOSED SURFACE OF CONCRETE ACCORDING TO MANUFACTURERS WRITTEN INSTRUCTIONS AS NECESSARY.
3. BEGIN CURING AFTER FINISHING CONCRETE, BUT NOT BEFORE FREE WATER HAS DISAPPEARED FROM CONCRETE SURFACE.
4. CURING METHODS: CURE CONCRETE BY CURING COMPOUND, MOISTURE CURING, MOISTURE-RETAINING-COVER CURING, OR A COMBINATION OF THESE AS FOLLOWS:

A. CURING COMPOUND: MEET REQUIREMENTS OF MANUFACTURER'S CURRENT PRINTED APPLICATION INSTRUCTIONS AND COVERAGE RATE CHART. FOR HORIZONTAL APPLICATIONS, IMMEDIATELY APPLY AFTER ALL SURFACE WATER HAS DISAPPEARED AND THE CONCRETE SURFACE IS HARD ENOUGH TO WALK ON. FOR VERTICAL APPLICATIONS, APPLY IMMEDIATELY AFTER REMOVING THE CONCRETE FORMS. APPLY IN A UNIFORM AND CONTINUOUS MANNER. AVOID OVER-APPLICATION OR PUDDLING OF CURING COMPOUND. PROTECT SURFACE FROM WATER, ADJACENT SHOTCRETE WORK, AND DEBRIS.

B. MOISTURE CURING: KEEP SURFACES CONTINUOUSLY MOIST FOR NOT LESS THAN SEVEN DAYS WITH THE FOLLOWING MATERIALS:

B.A. WATER.

B.B. CONTINUOUS WATER-FOG SPRAY.

B.C. ABSORPTIVE COVER, WATER SATURATED, AND KEPT CONTINUOUSLY WET. COVER CONCRETE SURFACES AND EDGES, OVERLAP SEAMS MIN. 6" BETWEEN ADJACENT ABSORPTIVE COVERS.

C. MOISTURE-RETAINING-COVER CURING:

C.A. COVER CONCRETE SURFACES WITH MOISTURE-RETAINING COVER FOR CURING CONCRETE, PLACED IN WIDEST PRACTICABLE WIDTH, WITH SIDES AND ENDS LAPPED AT LEAST 6 INCHES.

3.17 CURING MATERIALS

1. ABSORPTIVE COVER:

AASHTO M 182, CLASS 2, BURLAP CLOTH MADE FROM JUTE OR KENAF, WEIGHING APPROXIMATELY 9OZ./SQ. YD. DRY.

2. MOISTURE-RETAINING COVER:

ASTM C 171, POLYETHYLENE FILM OR WHITE BURLAP-POLYETHYLENE SHEET (BUR LENE).

3. WATER: POTABLE.
4. CURING COMPOUND: ASTM C-309, CLEAR, WATER-BASED, NO VOLATILE, NON-STAINING, MEMBRANE-FORMING, COMPATIBLE WITH SUBSEQUENT CONCRETE TREATMENTS. ACCEPTABLE PRODUCT: W.R. MEADOWS 1100-CLEAR, OR APPROVED EQUAL.

3.18 CONCRETE JOINTS

A. CLEANING: THE ENTIRE JOINT SHALL BE THOROUGHLY CLEANED AND WETTED PRIOR TO THE APPLICATION OF ADDITIONAL SHOTCRETE.

B. REINFORCEMENT: MAKE JOINTS PERPENDICULAR TO THE MAIN REINFORCEMENT. CONTINUE REINFORCEMENT ACROSS JOINTS.

3.19 CRACKING

A. SAW CUT CONTROL JOINTS AND CONSTRUCTION JOINTS MAY BE SHOWN IN THE CONSTRUCTION DRAWINGS FOR DIAGRAMMATIC PURPOSES ONLY. THE CONTRACTOR MAY, WITH APPROVAL OF THE SKATEPARK DESIGNER, RECOMMEND AND DETAIL ADDITIONAL JOINTS TO HELP PREVENT CRACKING.

B. THE CONTRACTOR SHALL FIX ALL CRACKS AND DISPLACEMENTS LARGER THAN 3/16" UP TO PROJECT COMPLETION.

811 Know what's below. Call before you dig. 1-800-227-2600 CA

SPECIFICATIONS

DIGALERT — DIAL BEFORE YOU DIG — TWO WORKING DAYS BEFORE YOU DIG — TOLL FREE 1-800-227-2600 — A PUBLIC SERVICE BY UNDERGROUND SERVICE ALERT

DATE	BY	MARK	REVISIONS	APPR.	DATE

ENGINEER — CITY

DESIGNED BY: GM, AL — DRAWN BY: AL — CHECKED BY: DG

SEAL: LICENSED LANDSCAPE ARCHITECT — ZACHARY MOSKOWITZ 6126 — Signature — 8/31/2023 — Renewal Date — 8/31/2023 — Date — STATE OF CALIFORNIA

APPROVED BY: DATE 08-03-2023
COUNTY / CITY ENGINEER
R.C.E. NO. _____ EXP. DATE _____

PREPARED BY: DATE _____
LANDSCAPE ARCHITECT
L.L.A NO. _____ EXP. DATE _____

BENCHMARK

SCALE AS SHOWN

DATE

RHA LANDSCAPE ARCHITECTS PLANNERS, INC.
6800 INDIANA AVENUE, SUITE #245
RIVERSIDE, CA 92506
LIC. #2799
PH. (951) 781-1930
FAX (951) 686-8091

CITY OF PERRIS
COPPER CREEK PARK
PARK IMPROVEMENT PLANS

FOR CITY OF PERRIS — W.O.

SHEET NO. **SK2.1** OF XX SHEETS

FILE NO. RHA# 22154

SKATE ELEMENTS TO BE PROVIDED BY
SPOHN RANCH SKATEPARKS
CONTACT VINCE ONEL
VINCE@SPOHNRANCH.COM
626-330-5803

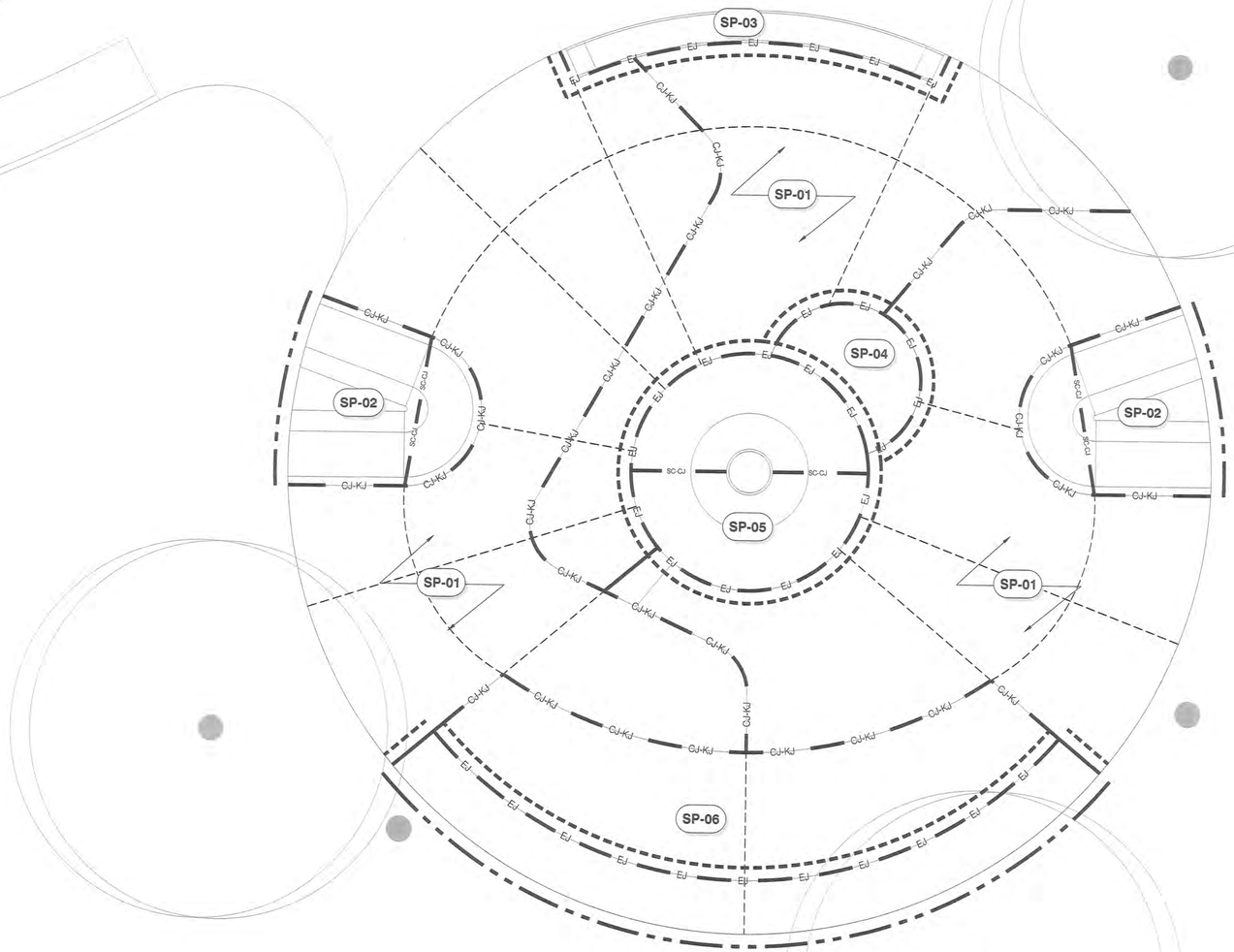

JOINTING SCHEDULE

SYMBOL	DESCRIPTION	QTY	DETAIL
H-01	EXPANSION JOINT	181 LF	4/SK9.0
H-02	COLD JOINT / KEY JOINT	222 LF	7/SK9.0
H-03	SAWCUT	283 LF	5/SK9.0
H-04	SC / CJ	39 LF	
H-05	TURNDOWN EDGE AT FINISH SURFACE	191 LF	3/SK9.0
H-06	TURNDOWN EDGE AT FINISH GRADE	96 LF	

INFORMATION SCHEDULE

SYMBOL	DESCRIPTION	DETAIL	SECTION
SP-01	4" THICK CONCRETE FLATWORK		
SP-02	ROLL-IN	8/SK9.0	A
SP-03	GRIND LEDGE	11/SK9.0	B
SP-04	CIRCLE MANUAL PAD	12/SK9.1	C
SP-05	QUARTERPIPE	10/SK9.0	D
SP-06	SLAPPY MOON	13/SK9.1	D

**JOINT PLAN HAS BEEN DEVELOPED TO PROVIDE GUIDANCE TO THE CONTRACTOR FOR THE USE OF SAW CUTS, COLD & EXPANSION JOINTS. ACTUAL FIELD VARIANCES WILL TAKE PRECEDENCE OVER THIS GUIDE. CONTRACTOR SHALL CUT SLAB AS NEEDED TO MINIMIZE CRACKING.

ALIGN SAW CUTS WITH EXPANSION AND COLD JOINTS AND START FROM CORNERS WHERE POSSIBLE TO PREVENT EXCESS CRACKING. SAW CUTS SHALL BE NO MORE THAN 10' X 12' AND/OR NOT TO EXCEED 120 SQUARE FEET AND A 2:1 MAX. RATIO BETWEEN SAW CUTS AND COLD OR EXPANSION JOINTS.

ALL SAW CUTS TO BE FILLED WITH SELF-LEVELING POLYURETHANE SEALANT AND TOOLED FLAT. MASK ALL SAW CUT/CONSTRUCTION JOINT EDGES TO PROTECT SURROUNDING CONCRETE FROM EXCESS SEALANT. EXPANSION JOINTS TO BE FILLED WITH POLYURETHANE BASED NON- SAGGING ELASTOMERIC SEALANT AND TOOLED FLAT. COLOR OF CAULK SHOULD RESEMBLE COLOR OF CONCRETE (ALUMINUM GRAY OR SIMILAR)

** PROVIDE ⅛" TOOLED EDGES TO JOINTS - SEE TYPICAL DETAILS & CONSTRUCTION SPECIFICATIONS FOR JOINT INFORMATION & INSTALLATION

NOTES:

1. SEE SHEET SK4.0 FOR COLOR PLAN.
2. THE SLAB CONFIGURATION, NOTES, LOCATION OF EXPANSION JOINTS, COLD JOINTS, SAW CUTS, DETAIL REFERENCES, AND APPLICABLE DETAILS HAVE BEEN INCLUDED FOR CLARITY. JOINTS AND DETAILS SHOWN ARE FOR THE SKATEPARK ONLY. REFER TO THE LANDSCAPE PLANS FOR SCOPES BEYOND THE SKATEPARK.
3. SUGGESTED ORDER OF CONSTRUCTION FOR CONCRETE ELEMENTS WITHIN THE SKATEPARK FOOTPRINT:
   A. SUBGRADE PREP - GRADE, MOISTURE CONDITION, AND COMPACT SKATEPARK FOOTPRINT TO +/- .1' OF SPECIFIED SUBGRADE ELEVATIONS.
   B. FINE GRADING
   C. LEDGES AND MANUAL PADS
   D. BANKS AND TRANSITIONS
   E. FLOOR SLAB/FLATWORK
4. ALL EXPOSED CONCRETE AND SHOTCRETE SURFACES TO BE NATURAL GRAY IN COLOR WITH HARD STEEL TROWEL FINISH UNLESS OTHERWISE SPECIFIED.

811 Know what's below. Call before you dig. 1-800-227-2600 CA

INFORMATION PLAN

0 1' 5' 10'
Scale: 3/16" = 1'-0"

NORTH

DIGALERT — DIAL BEFORE YOU DIG — TWO WORKING DAYS BEFORE YOU DIG — TOLL FREE 1-800-227-2600 — A PUBLIC SERVICE BY UNDERGROUND SERVICE ALERT

DATE	BY	MARK	REVISIONS	APPR.	DATE
				CITY	

ENGINEER
DESIGNED BY: GM, AL DRAWN BY: AL CHECKED BY: DG

SEAL: LICENSED LANDSCAPE ARCHITECT — ZACHARY MOSKOWITZ 6716 — Signature 8/31/2025 Renewal Date 8/5/2023 Date — STATE OF CALIFORNIA

APPROVED BY: DATE 08-03-2023
CITY ENGINEER
R.C.E. NO. _____ EXP. DATE _____

PREPARED BY: DATE _____
LANDSCAPE ARCHITECT
L.L.A NO. _____ EXP. DATE _____

BENCHMARK

SCALE AS SHOWN
DATE

RHA LANDSCAPE ARCHITECTS PLANNERS, INC.
6800 INDIANA AVENUE, SUITE #245
RIVERSIDE, CA 92506
LIC. #2799
PH. (951) 781-1930
FAX (951) 686-8091

CITY OF PERRIS
COPPER CREEK PARK
PARK IMPROVEMENT PLANS

FOR CITY OF PERRIS W.O.

SHEET NO. **SK3.0** OF XX SHEETS
FILE NO. RHA# 22154

SKATE ELEMENTS TO BE PROVIDED BY
SPOHN RANCH SKATEPARKS
CONTACT VINCE ONEL
VINCE@SPOHNRANCH.COM
626-330-5803

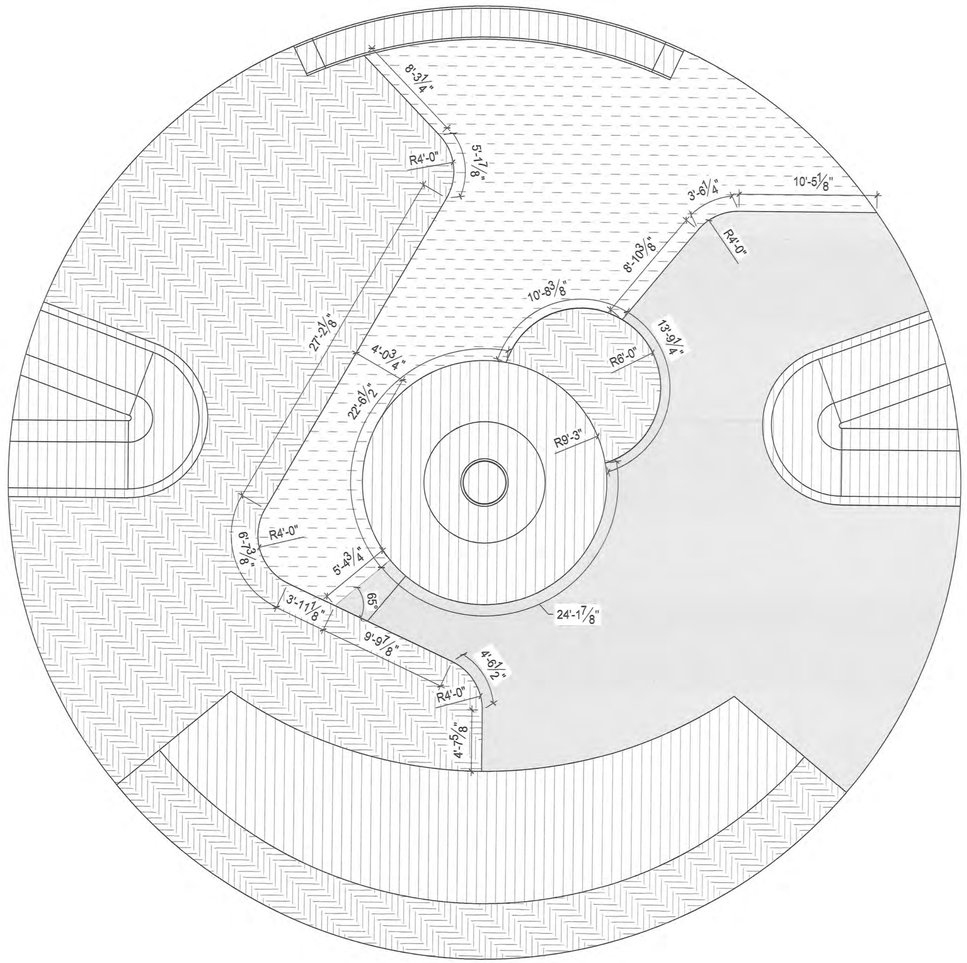

COLOR SCHEDULE

SYMBOL	COLOR DESCRIPTION	QTY
C-01	COLORED CAST-IN-PLACE CONCRETE TO BE PALOMINO BY EA PIGMENTS OR APPROVED EQUAL	1,116 SF
C-02	CAST-IN-PLACE CONCRETE TO BE NATURAL GRAY	654 SF
C-03	COLORED CAST-IN-PLACE CONCRETE TO BE COLUMBIA LT. GRAY BY EA PIGMENTS OR APPROVED EQUAL	927 SF
C-04	COLORED CAST-IN-PLACE CONCRETE TO BE CHARCOAL BY EA PIGMENTS OR APPROVED EQUAL	1,372 SF

COLOR NOTES:

1. CONCRETE COLOR AVAILABLE FROM EA PIGMENTS 1-888-222-7501, OR APPROVED EQUAL.
2. FINISH: ALL EXPOSED CONCRETE SURFACES ARE TO BE HARD STEEL TROWEL FINISH UNLESS OTHERWISE NOTED. TROWEL UNTIL ALL VISIBLE PORES ARE CLOSED. CEASE TROWELING BEFORE SURFACE BECOMES GLOSSY. DO NOT BROOM FINISH AND DO NOT TROWEL BURN SURFACE.
3. REFER TO STEEL PLAN ON SHEET SK7.0 FOR STEEL FINISH.

811 Know what's below. Call before you dig. 1-800-227-2600 CA

COLOR PLAN

0 1' 5' 10'
Scale: 3/16" = 1'-0"

NORTH

DIGALERT
DIAL BEFORE YOU DIG
TWO WORKING DAYS BEFORE YOU DIG
TOLL FREE 1-800-227-2600
A PUBLIC SERVICE BY UNDERGROUND SERVICE ALERT

DATE	BY	MARK	REVISIONS	APPR.	DATE
				CITY	

ENGINEER
DESIGNED BY: GM, AL DRAWN BY: AL CHECKED BY: DG

SEAL
LICENSED LANDSCAPE ARCHITECT ZACHARY MOSKOWITZ 6128 STATE OF CALIFORNIA
Signature
8/31/2025
Renewal Date
8/30/2023
Date

APPROVED BY: DATE 08-03-2023
CITY ENGINEER
R.C.E. NO. _____ EXP. DATE _____
PREPARED BY: DATE _____
LANDSCAPE ARCHITECT
L.L.A NO. _____ EXP. DATE _____

BENCHMARK

SCALE AS SHOWN
DATE

RHA LANDSCAPE ARCHITECTS PLANNERS, INC.
6800 INDIANA AVENUE, SUITE #245
RIVERSIDE, CA 92506
LIC. #2799
PH. (951) 781-1930
FAX (951) 686-8091

CITY OF PERRIS
COPPER CREEK PARK
PARK IMPROVEMENT PLANS

FOR CITY OF PERRIS W.O.

SHEET NO. SK4.0 OF XX SHEETS
FILE NO. RHA# 22154

SKATE ELEMENTS TO BE PROVIDED BY
SPOHN RANCH SKATEPARKS
CONTACT VINCE ONEL
VINCE@SPOHNRANCH.COM
626-330-5803

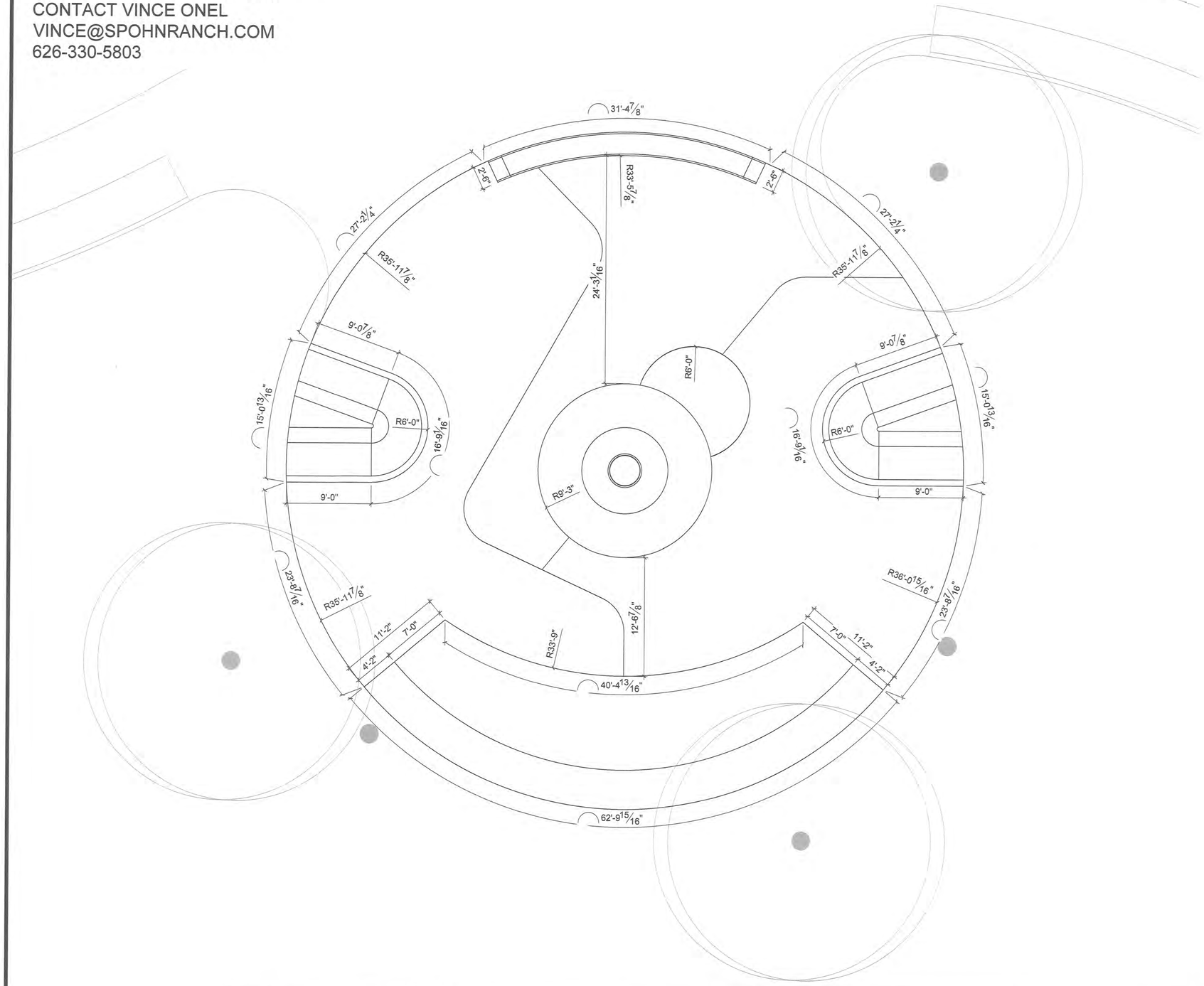

CONSTRUCTION NOTES:

1. ALL MATERIAL AND WORKMANSHIP SHALL CONFORM TO ALL APPLICABLE GOVERNING CODES AND ORDINANCES.
2. ALL FORMS AND ALIGNMENTS OF PAVING, LAYOUT, AND SPECIAL PAVING AREAS SHALL BE REVIEWED AND APPROVED BY THE OWNER'S REPRESENTATIVE PRIOR TO POURING (GIVE A MINIMUM OF 24 HOURS NOTICE)
3. CONTRACTOR SHALL VERIFY THE LOCATION OF ALL PUBLIC IMPROVEMENTS, INCLUDING UNDERGROUND UTILITIES PRIOR TO THE START OF CONSTRUCTION. CONTRACTOR SHALL REPAIR AND/OR REPLACE IN-KIND ALL PUBLIC IMPROVEMENTS DAMAGED, BROKEN, OR REMOVED DURING CONSTRUCTION
4. CONCRETE SHALL HAVE A MINIMUM COMPRESSIVE STRENGTH OF 4000 PSI AT 28 DAYS (UNLESS OTHERWISE NOTED).
5. ALL REBAR CROSSINGS TO BE TIED.
6. ALL CONSTRUCTION TO BE PLUMB AND TRUE, UNLESS OTHERWISE NOTED OR INDICATED.
7. THE CONTRACTOR SHALL VERIFY AND BE RESPONSIBLE FOR ALL DIMENSIONS AND CONDITIONS AT THE JOB SITE. ALL DISCREPANCIES SHALL BE BROUGHT TO THE IMMEDIATE ATTENTION OF THE SKATE PARK DESIGNER, OWNER/BUILDER OR OWNER'S REPRESENTATIVE.
8. THE CONTRACTOR IS SOLELY RESPONSIBLE FOR ALL CONSTRUCTION METHODS AND FOR SAFETY CONDITIONS AT THE WORK SITE.
9. ALL BRACING, TEMPORARY SUPPORTS, SHORING, ETC.. ARE THE SOLE RESPONSIBILITY OF THE CONTRACTOR.
10. OBSERVATION VISITS TO THE JOB SITE BY THE SKATE PARK DESIGNER OR OWNER, DO NOT INCLUDE INSPECTION OF CONSTRUCTION PROCEDURES. THE VISIT SHALL NOT BE CONSTRUED AS CONTINUOUS AND DETAILED INSPECTIONS.
11. CONDITIONS NOT SPECIFICALLY SHOWN SHALL BE CONSTRUCTED SIMILAR TO THE DETAILS FOR THE RESPECTIVE MATERIALS.
12. THE DRAWINGS AND SPECIFICATIONS REPRESENT THE FINISHED CONSTRUCTION PRODUCT. THESE DOCUMENTS, ALTHOUGH PREPARED WITH CARE AND DILIGENCE, MAY CONTAIN ERRORS, OMISSIONS, CONTRADICTIONS, ETC. THE CONTRACTOR SHALL REVIEW ALL DOCUMENTS THOROUGHLY AND SHALL NOTIFY THE SKATE PARK DESIGNER IMMEDIATELY UPON ANY SUCH DISCOVERY OR DISCREPANCY. GOVERNING CODES SHALL THEN APPLY.
13. ALL SCALE DIMENSIONS ARE APPROXIMATE. WRITTEN DIMENSIONS AND DETAILS TAKE PRECEDENCE OVER SCALED DIMENSIONS. THE CONTRACTOR SHALL CHECK AND VERIFY ALL SITE DIMENSIONS PRIOR TO PROCEEDING WITH WORK AND CLARIFY WITH SKATE PARK DESIGNER, OWNER IF NECESSARY.
14. DESIGN, MATERIAL, EQUIPMENT AND PRODUCTS OTHER THAN THOSE DESCRIBED OR INDICATED ON DRAWINGS MAY BE CONSIDERED FOR USE. APPROVAL FOR SUBSTITUTIONS SHALL BE OBTAINED FROM THE SKATE PARK DESIGNER.
15. SHOP DRAWINGS SHALL BE SUBMITTED BY THE CONTRACTOR FOR THE CLARIFICATION OF DESIGN CONCEPT DETAILS & SUBSTITUTIONS.
16. DURING WORK AND THROUGH ITS COMPLETION, THE CONTRACTOR SHALL KEEP THE SITE CLEAN TO THE SATISFACTION OF THE OWNER.
17. FINAL MATERIAL, FINISHES AND COLOR SHALL BE APPROVED BY OWNER AND SKATE PARK DESIGNER PRIOR TO INSTALLATION.
18. CLEAN-UP SHALL TAKE PLACE ON A DAILY BASIS.
19. REFER TO SPECIFICATIONS FOR ANY ADDITIONAL INFORMATION.

**ALL COLD JOINTS AT THE BOTTOM OF ALL RADIUS TRANSITIONS & RADIUS BANKS SHALL BE LOCATED 8" MAX. FROM THE POINT OF TANGENCY. SEE TYPICAL DETAILS FOR CLARIFICATION.

811 Know what's below. Call before you dig. 1-800-227-2600 CA

LAYOUT PLAN

0 1' 5' 10'
Scale: 3/16" = 1'-0"

NORTH

DIGALERT
DIAL BEFORE YOU DIG — TWO WORKING DAYS BEFORE YOU DIG
TOLL FREE 1-800-227-2600
A PUBLIC SERVICE BY UNDERGROUND SERVICE ALERT

DATE	BY	MARK	REVISIONS	APPR.	DATE
				CITY	

DESIGNED BY: GM, AL DRAWN BY: AL CHECKED BY: DG

SEAL: LICENSED LANDSCAPE ARCHITECT ZACHARY MOSKOWITZ 6726 STATE OF CALIFORNIA

APPROVED BY: DATE 08-03-2023
CONTRACT CITY ENGINEER
R.C.E. NO. EXP. DATE

PREPARED BY: DATE
LANDSCAPE ARCHITECT
L.L.A NO. EXP. DATE

BENCHMARK

SCALE AS SHOWN
DATE

RHA LANDSCAPE ARCHITECTS PLANNERS, INC.
6800 INDIANA AVENUE, SUITE #245
RIVERSIDE, CA 92506
LIC. #2799
PH. (951) 781-1930
FAX (951) 686-8091

CITY OF PERRIS
COPPER CREEK PARK
PARK IMPROVEMENT PLANS

FOR CITY OF PERRIS W.O.

SHEET NO. SK5.0 OF XX SHEETS
FILE NO. RHA# 22154

SKATE ELEMENTS TO BE PROVIDED BY
SPOHN RANCH SKATEPARKS
CONTACT VINCE ONEL
VINCE@SPOHNRANCH.COM
626-330-5803

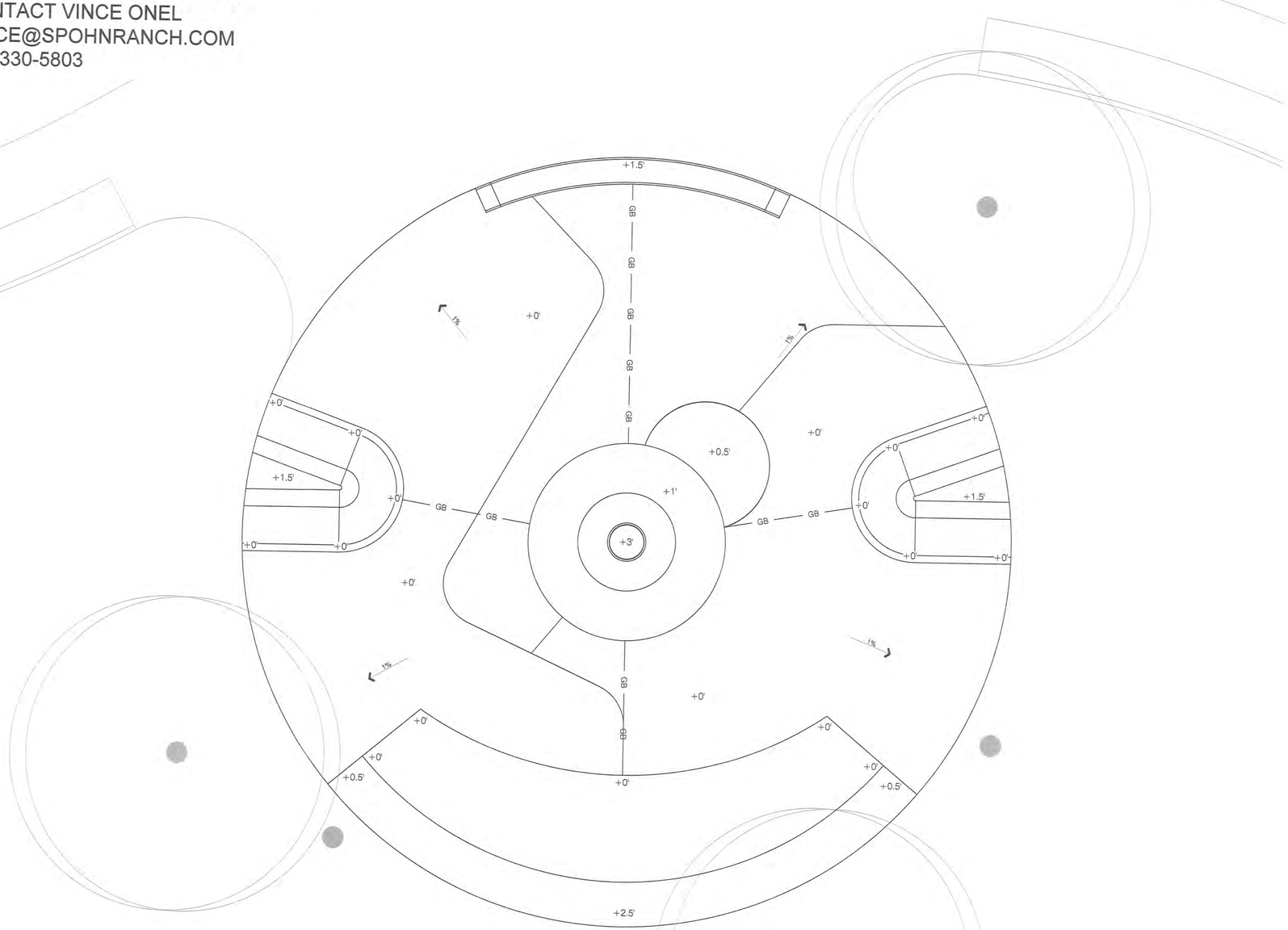

GRADING NOTES

1. ALL GRADING SHALL BE IN ACCORDANCE WITH THE LOCAL GRADING CODE AND ANY SPECIAL REQUIREMENTS OF THE GRADING PERMIT.
2. CONTRACTOR TO VERIFY GRADES AND NOTIFY OWNER'S CONSTRUCTION ADMINISTRATOR PRIOR TO START OF GRADING WORK.
3. SLOPES SHALL BE NO STEEPER THAN 3' HORIZONTAL TO 1' VERTICAL (3:1) AND SHALL HAVE NOT LESS THAN 90% COMPACTION OUT TO THEIR FINISH SURFACES.
4. ALL PAVED AREAS SHALL SLOPE AS SHOWN ON PLANS WITH A 2% MAXIMUM FALL. PLANTED AREAS SHALL HAVE A MINIMUM 2% FALL.
5. FINISH GRADE SHALL HAVE A UNIFORM SURFACE, FREE OF LUMPS, BUMPS AND DEPRESSIONS AND ANY OBJECTS THAT MAY PREVENT A POSITIVE FLOW TO DRAIN.
6. ALL PROPOSED PAVING SURFACES SHALL MEET EXISTING PAVING SURFACES WITH SMOOTH AND CONTINUOUS TRANSITIONS AND FLUSH ALONG ENTIRE EDGE.
7. CONCRETE WALKS TO HAVE A MAXIMUM CROSS SLOPE OF 2% AND SHALL MEET ALL CITY AND COUNTY REQUIREMENTS.
8. PRIOR TO CONSTRUCTION, CONTRACTOR SHALL VERIFY ALL UTILITY LOCATIONS, EXISTING DRAINAGE STRUCTURES, PARKING LOT IMPROVEMENTS, AND FINISH FLOOR ELEVATIONS. NOTIFY THE OWNER'S CONSTRUCTION ADMINISTRATOR IMMEDIATELY UPON NOTING ANY DISCREPANCIES.
9. FINISH GRADE AT TURF AREAS SHALL BE ONE INCH BELOW FINISH SURFACE OF SIDEWALKS, CURBS OR PAVED AREAS. PLANTING AREA FINISH GRADE SHALL BE 2" BELOW SAME UNLESS OTHERWISE SPECIFIED.
10. ALL CONSTRUCTION AREAS SHALL BE FREE OF ROCK, DEBRIS, ETC. ALL EXISTING WEEDS SHALL BE REMOVED.
11. CONTRACTOR SHALL MEET EXISTING GRADE AT GRADING LIMITS WITH A SMOOTH AND CONTINUOUS TRANSITION.

GRADING LEGEND:

- EXISTING CONTOURS
- PROPOSED CONTOURS
- GB — GB — PROPOSED GRADE BREAK
- XXX.XX FS — PROPOSED ELEVATIONS
- PROPOSED FLOW DIRECTION

BS	BOTTOM OF STEP
FG	FINISH GRADE
FS	FINISH SURFACE
HP	HIGH POINT
INV	INVERT ELEVATION (MAY CHANGE IN FIELD)
PA	PLANTING AREA
TD	TOP OF DRAIN
TL	TOP OF LEDGE
TP	TOP OF PAD
TR	TOP OF RAIL
TS	TOP OF STEP

XXX — EXISTING ELEVATION (VERIFY IN FIELD)

Know what's below. Call before you dig. 1-800-227-2600 CA

GRADING + DRAINAGE PLAN

0 1' 5' 10'
Scale: 3/16" = 1'-0"

NORTH

DIGALERT — DIAL BEFORE YOU DIG — TWO WORKING DAYS BEFORE YOU DIG — TOLL FREE 1-800-227-2600 — A PUBLIC SERVICE BY UNDERGROUND SERVICE ALERT

DATE	BY	MARK	REVISIONS	APPR.	DATE
				CITY	

DESIGNED BY: GM, AL DRAWN BY: AL CHECKED BY: DG

SEAL: LICENSED LANDSCAPE ARCHITECT — ZACHARY MOSKOWITZ 6726 — Signature — 8/31/2025 Renewal Date — 8/30/2023 Date — STATE OF CALIFORNIA

APPROVED BY: CONTRACT CITY ENGINEER — DATE 08-03-2023
R.C.E. NO. _____ EXP. DATE _____

PREPARED BY: DATE _____
LANDSCAPE ARCHITECT
L.L.A NO. _____ EXP. DATE _____

BENCHMARK

SCALE AS SHOWN
DATE

RHA LANDSCAPE ARCHITECTS PLANNERS, INC.
6800 INDIANA AVENUE,
SUITE #245
RIVERSIDE, CA 92506
LIC. #2799
PH. (951) 781-1930
FAX (951) 686-8091

CITY OF PERRIS
COPPER CREEK PARK
PARK IMPROVEMENT PLANS

FOR CITY OF PERRIS W.O.

SHEET NO. **SK6.0** OF XX SHEETS
FILE NO. RHA# 22154

SKATE ELEMENTS TO BE PROVIDED BY
SPOHN RANCH SKATEPARKS
CONTACT VINCE ONEL
VINCE@SPOHNRANCH.COM
626-330-5803

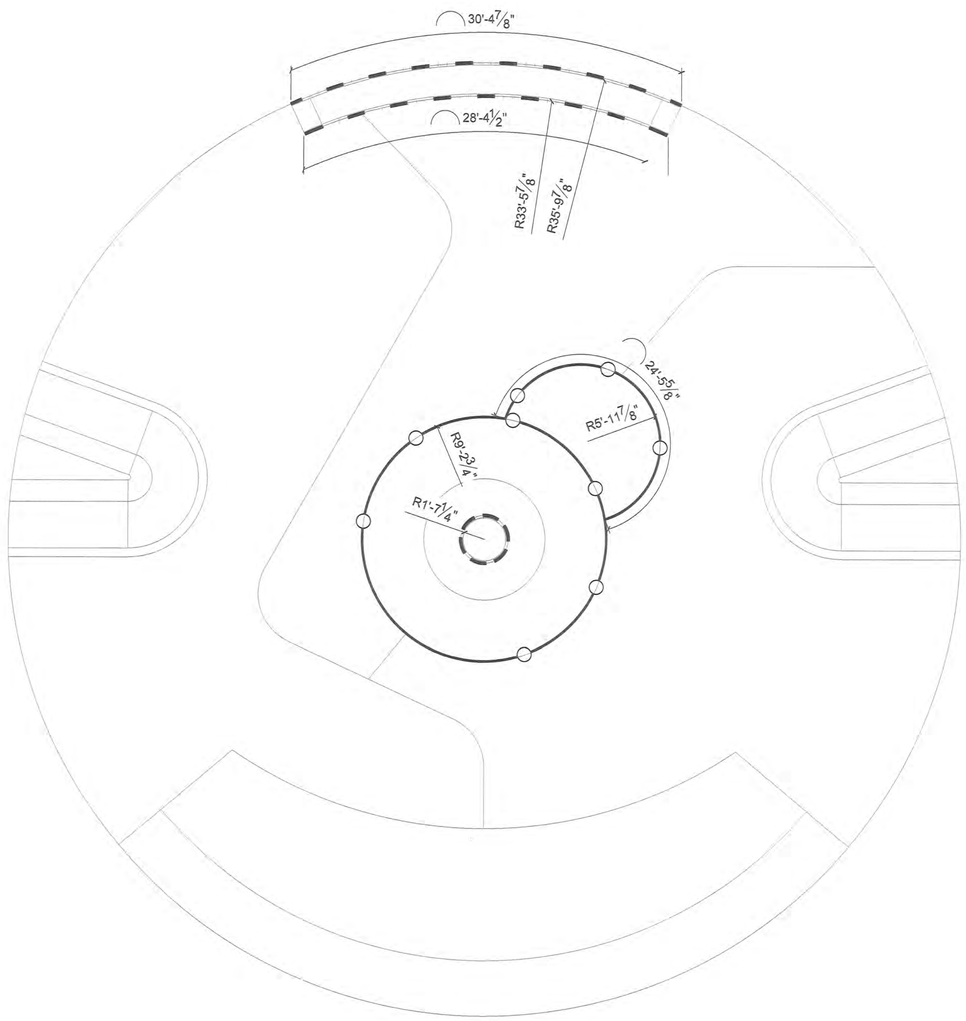

STEEL SCHEDULE

SYMBOL	DESCRIPTION	QTY	DETAIL	FINISH
S-01	2-3/8" O.D. SCH. 40 STEEL COPING	21 LF	9/SK9.0	HOT DIPPED GALVANIZED
S-02	STEEL FACEPLATE	92 LF	6/SK9.0	POWDER COAT RAL #5018
S-03	1.5" X 2" X 3/16" THICK STEEL EDGING	69 LF		POWDER COAT RAL #5018

NOTES :

1. STEEL FINISH TO BE HOT DIPPED GALVANIZED OR POWDER COATED RAL #5018 (TURQUOISE BLUE) AS INDICATED IN LEGEND FINISH.
2. FINISH MUST OCCUR AFTER ALL WELDING IS COMPLETE.
3. CAP ALL EXPOSED TUBE OR PIPE ENDS AND ROUND ALL SHARP EDGES.
4. ALL WELDS TO BE ALL AROUND.
5. GRIND ALL WELDS SMOOTH BEFORE FINISHING.
6. FABRICATE STEEL GRIND EDGES IN LONG SECTIONS THAT WILL WORK FOR SHIPPING AND REDUCE THE NUMBER OF WELDS IN THE FIELD.
7. CLEAN METAL EDGES AFTER PLACEMENT OF CONCRETE.
8. POWDER COATING REPAIR - USE AN APPROPRIATELY COLOR MATCHED POWDER COAT TOUCH-UP SPRAY PAINT ON WELDED OR DAMAGED POWDER COATED SURFACES.
9. HOT DIPPED GALVANIZE REPAIR - FIELD WELDS SHALL BE GROUND SMOOTH AND TREATED WITH COLD GALVANIZING SPRAY.
10. SEE SK2.0 - METAL FABRICATIONS OF SPECBOOK FOR SKATEPARKS FOR ALL STEEL SPECIFICATIONS.

COPING / RAIL JOINT WELDS

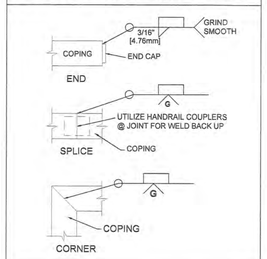

Know what's below.
Call before you dig.
1-800-227-2600 CA

STEEL PLAN

0 1' 5' 10'
Scale: 3/16" = 1'-0"

NORTH

DIGALERT
DIAL BEFORE YOU DIG
TWO WORKING DAYS BEFORE YOU DIG
TOLL FREE 1-800-227-2600
A PUBLIC SERVICE BY UNDERGROUND SERVICE ALERT

DATE	BY	MARK	REVISIONS	APPR.	DATE

ENGINEER | CITY
DESIGNED BY: GM, AL DRAWN BY: AL CHECKED BY: DG

SEAL
LICENSED LANDSCAPE ARCHITECT
ZACHARY MOSKOWITZ 6126
Signature
8/31/2025
Renewal Date
8/3/2023
Date
STATE OF CALIFORNIA

APPROVED BY: DATE 08-03-023
CONTRACT ENGINEER
R.C.E. NO. EXP. DATE
PREPARED BY: DATE
LANDSCAPE ARCHITECT
L.L.A NO. EXP. DATE

BENCHMARK
SCALE AS SHOWN
DATE

RHA LANDSCAPE ARCHITECTS PLANNERS, INC
6800 INDIANA AVENUE,
SUITE #245
RIVERSIDE, CA 92506
LIC. #2799
PH. (951) 781-1930
FAX (951) 686-8091

CITY OF PERRIS
COPPER CREEK PARK
PARK IMPROVEMENT PLANS
FOR CITY OF PERRIS W.O.

SHEET NO.
SK7.0
OF XX SHEETS
FILE NO.
RHA# 22154

SKATE ELEMENTS TO BE PROVIDED BY
SPOHN RANCH SKATEPARKS
CONTACT VINCE ONEL
VINCE@SPOHNRANCH.COM
626-330-5803

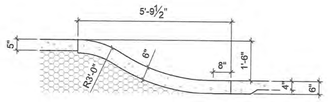

SECTION A

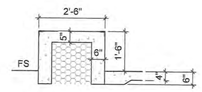

SECTION B

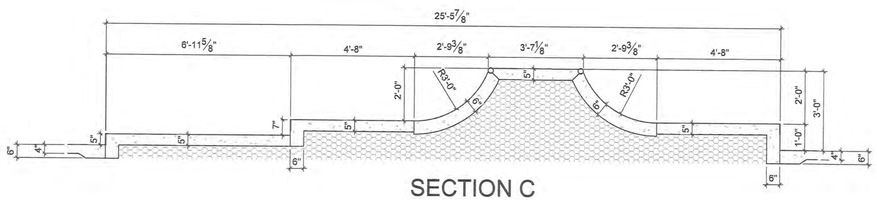

SECTION C

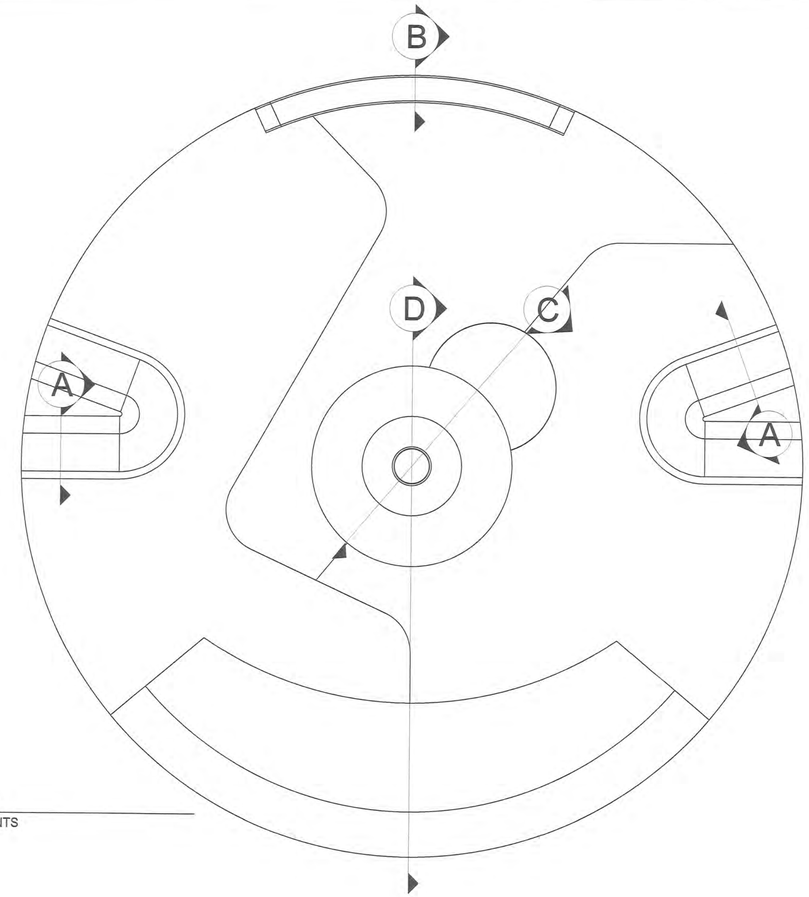

1 PLAN
SCALE: NTS

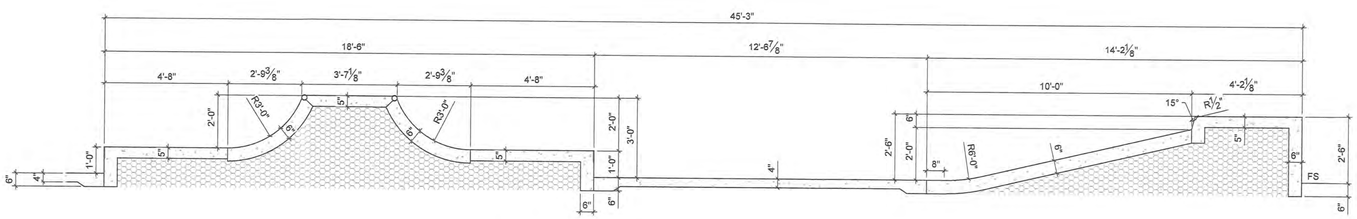

SECTION D

2 SECTIONS
SCALE: 3/8" = 1'-0"

0 1' 2' 4'
Scale: 3/8" = 1'-0"

SECTIONS

DIGALERT
DIAL BEFORE YOU DIG
TWO WORKING DAYS BEFORE YOU DIG
TOLL FREE 1-800-227-2600
A PUBLIC SERVICE BY UNDERGROUND SERVICE ALERT

DATE	BY	MARK	REVISIONS	APPR.	DATE
				CITY	

ENGINEER
DESIGNED BY: GM, AL DRAWN BY: AL CHECKED BY: DG

SEAL
LICENSED LANDSCAPE ARCHITECT
ZACHARY MOSKOWITZ 6128
Signature
8/31/2025
Renewal Date
8/3/2023
Date
STATE OF CALIFORNIA

APPROVED BY: DATE 08-03-2023
CONTRACT CITY ENGINEER
R.C.E. NO. _____ EXP. DATE _____
PREPARED BY: DATE _____
LANDSCAPE ARCHITECT
L.L.A NO. _____ EXP. DATE _____

BENCHMARK
SCALE AS SHOWN
DATE

RHA LANDSCAPE ARCHITECTS PLANNERS, INC
6800 INDIANA AVENUE,
SUITE #245
RIVERSIDE, CA 92506
LIC. #2799
PH. (951) 781-1930
FAX (951) 686-8091

CITY OF PERRIS
COPPER CREEK PARK
PARK IMPROVEMENT PLANS
FOR CITY OF PERRIS W.O.

SHEET NO.
SK8.0
OF XX SHEETS
FILE NO.
RHA# 22154

1. #3 REBAR @ 16" O.C. BOTH WAYS
2. 4000 PSI CONCRETE FLAT WORK
3. BASE COURSE
4. COMPACTED SUBGRADE
5. SLIP DOWEL BY OTHERS. ONLY REQUIRED IF ACCESS PATH BEYOND IS CONCRETE SLAB
6. ACCESS PATH BEYOND SKATEPARK

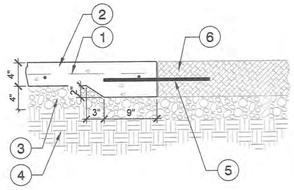

1 SKATEPARK TO ACCESS PATH CONNECTION

1" = 1'-0" P-PIP-LAN-19

1. 4000 PSI CONCRETE FLATWORK WITH #3 REBAR @ 16" O.C. B.W.
2. COLD OR EXPANSION JOINT
3. SLEEVE FOR SLIP DOWEL OR WRAP/GREASE ONE END
4. 1/2" SMOOTH DOWEL OR REBAR DROP. SPACE 2'-6" O.C. ALONG JOINT

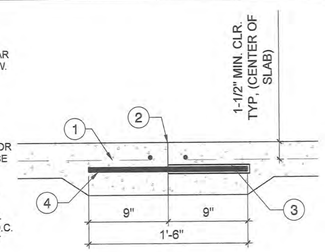

2 SLIP DOWEL

1 1/2" = 1'-0" P-PIP-LAN-02

1. EXPANSION JOINT
2. 4000 PSI CONCRETE FLATWORK WITH #3 REBAR 16" O.C. BW
3. SLIP DOWEL
4. 1/2" TOOLED EDGE OR STEEL EDGING. SEE STEEL PLAN FOR LOCATION.
5. COMPACTED SUBGRADE
6. STRUCTURAL FOAM FILL - TO BE EPS15 OR SIMILAR

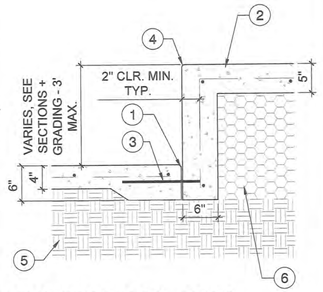

3 TURNDOWN EDGE AT FS - NO BC

1" = 1'-0" P-PIP-LAN-12

1. 4000 PSI CONCRETE FLATWORK WITH #3 REBAR @ 16" O.C. BW
2. PRE-COMPRESSED EXPANSION MATERIAL 1/2" DECK-O-FOAM OR SIMILAR
3. EXPANSION JOINT. 1/8" TOOLED EDGE. APPLY POLYURETHANE BASED NON-SAGGING ELASTOMERIC SEALANT AND TOOL FLAT
4. CONCRETE SKATE ELEMENT
5. SLIP DOWEL
6. COMPACTED SUBGRADE

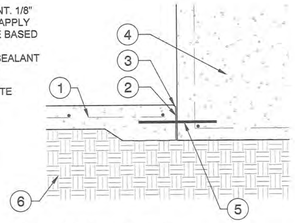

4 EXPANSION JOINT - NO BC

1" = 1'-0" P-PIP-LAN-14

1. 4000 PSI CONCRETE FLATWORK WITH #3 REBAR @ 16" O.C. BW
2. 1/8" SAW CUT - FILL JOINT WITH SELF LEVELING SEALANT AND TOOL FLAT. PROTECT SURROUNDING SURFACE FROM EXCESS SEALANT.

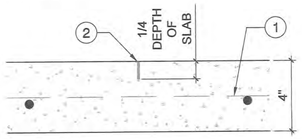

5 SAWCUT JOINT

3" = 1'-0" P-PIP-LAN-04

1. 1/8" MIN. ROUTED EDGE GROUND SMOOTH
2. 6" x 3/16" THICK STEEL PLATE -SEE STEEL PLAN FOR LOCATION
3. COPING ANCHOR, 3/8" X 4" MIN. NELSON STUD OR SIMILAR @ 18" O.C.
4. 1/8" TOOLED EDGE BOTH SIDES
5. TYPICAL STEEL REINFORCEMENT
6. SKATE ELEMENT

SEE STEEL PLAN FOR FABRICATION + FINISH NOTES

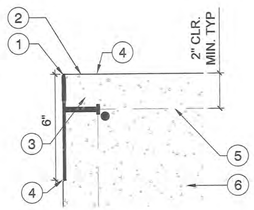

6 STEEL FACE PLATE

3" = 1'-0" P-PIP-LAN-07

1. 4000 PSI CONCRETE FLATWORK WITH #3 REBAR @ 16" O.C. BW
2. 1/8" TOOLED EDGE BOTH SIDES
3. COMPACTED SUBGRADE
4. SLIP DOWEL
5. KEY JOINT 1-5/8" O.D.

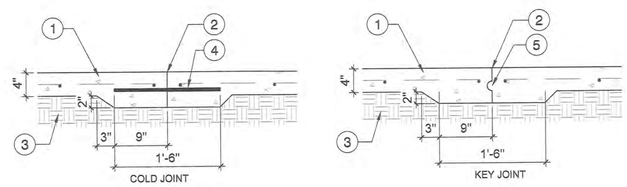

7 COLD JOINT / KEY JOINT - NO BC

1" = 1'-0" P-PIP-LAN-16

1. 4000 PSI CONCRETE FLAT WORK WITH #3 REBAR @ 16" O.C. B.W.
2. STRUCTURAL FOAM FILL - TO BE EPS15 OR SIMILAR
3. 4000 PSI SHOTCRETE WITH #3 REBAR @ 12" O.C. B.W.*
4. COMPACTED SUB-GRADE
5. COLD JOINT / KEY JOINT
6. SLIP DOWEL

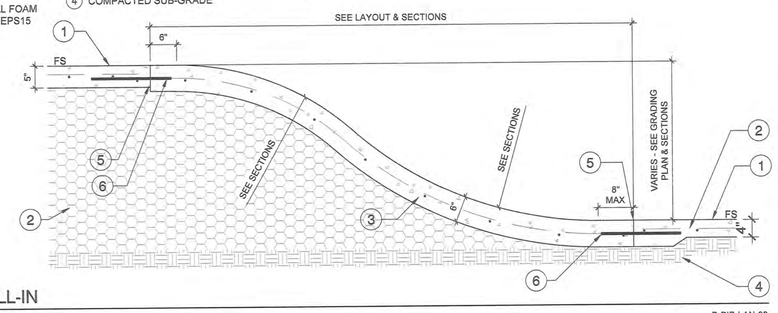

8 ROLL-IN

3/4" = 1'-0" P-PIP-LAN-33

1. 1/8" TOOLED EDGE BOTH SIDES OF COPING
2. STEEL COPING - SEE STEEL PLAN FOR LOCATION
3. CONSTRUCTION JOINT HAND SHAPED PRIOR TO CONCRETE CURING
4. TYPICAL STEEL REINFORCEMENT
5. BOWL TRANSITION
6. COPING ANCHOR, 3/8" X 4" MIN. NELSON STUD OR SIMILAR@ 18" O.C.
7. STRUCTURAL FOAM FILL - TO BE EPS15 OR SIMILAR
8. 4000 PSI CONCRETE FLATWORK

SEE STEEL PLAN FOR FABRICATION + FINISH NOTES

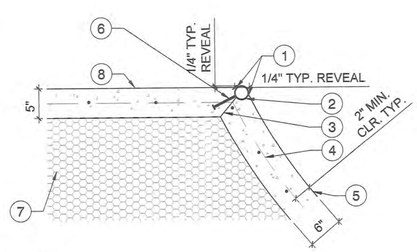

9 STEEL COPING - FOAM

1" = 1'-0" P-PIP-LAN-17

1. 4000 PSI CONCRETE FLATWORK WITH #3 REBAR @ 16" O.C. BW
2. COMPACTED SUB-GRADE
3. STEEL COPING
4. 4000 PSI SHOTCRETE WITH #3 REBAR @ 12" O.C. BW
5. SLIP DOWEL
6. COLD JOINT
7. STRUCTURAL FOAM FILL - TO BE EPS15 OR SIMILAR

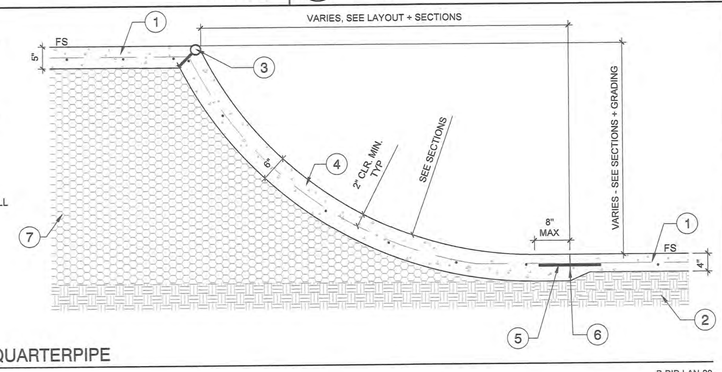

10 TYPICAL QUARTERPIPE

3/4" = 1'-0" P-PIP-LAN-29

1. 4000 PSI CONCRETE WITH #3 REBAR CONTINUOUS BOTH WAYS @ 16" O.C.
2. 1/8" TOOLED EDGE. APPLY POLYURETHANE BASED NON-SAGGING ELASTOMERIC SEALANT AND TOOL FLAT
3. PRE-COMPRESSED EXPANSION MATERIAL
4. SLIP DOWEL
5. STEEL EDGING
6. COMPACTED SUB-GRADE
7. STRUCTURAL FOAM FILL - TO BE EPS15 OR SIMILAR

SEE STEEL PLAN FOR FABRICATION + FINISH NOTES

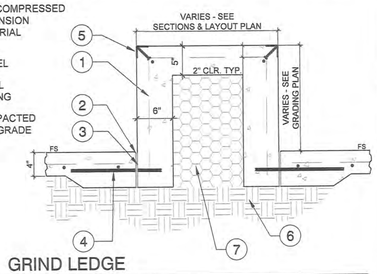

11 GRIND LEDGE

1" = 1'-0" P-PIP-LAN-28

SKATE ELEMENTS TO BE PROVIDED BY
SPOHN RANCH SKATEPARKS
CONTACT VINCE ONEL
VINCE@SPOHNRANCH.COM
626-330-5803

CONSTRUCTION DETAILS

DIGALERT — DIAL BEFORE YOU DIG — TWO WORKING DAYS BEFORE YOU DIG — TOLL FREE 1-800-227-2600 — A PUBLIC SERVICE BY UNDERGROUND SERVICE ALERT

DATE	BY	MARK	REVISIONS	APPR.	DATE

ENGINEER — CITY

DESIGNED BY: GM, AL DRAWN BY: AL CHECKED BY: DG

SEAL: LICENSED LANDSCAPE ARCHITECT — ZACHARY MOSKOWITZ 6726 — Signature — 8/31/2023 — Renewal Date — 8/3/2023 — Date — STATE OF CALIFORNIA

APPROVED BY: DATE 08.03.2023
CONTRACT CITY ENGINEER
R.C.E. NO. EXP. DATE

PREPARED BY: DATE
LANDSCAPE ARCHITECT
L.L.A NO. EXP. DATE

BENCHMARK

SCALE AS SHOWN
DATE

RHA LANDSCAPE ARCHITECTS PLANNERS, INC.
6800 INDIANA AVENUE, SUITE #245
RIVERSIDE, CA 92506
LIC. #2799
PH. (951) 781-1930
FAX (951) 686-8091

CITY OF PERRIS
COPPER CREEK PARK
PARK IMPROVEMENT PLANS

FOR CITY OF PERRIS W.O.

SHEET NO. **SK9.0** OF XX SHEETS
FILE NO. RHA# 22154

1. 4000 PSI CONCRETE WITH #3 REBAR @ 16" O.C. B.W.
2. STEEL FACEPLATE
3. COMPACTED SUBGRADE
4. STRUCTURAL FOAM FILL - TO BE EPS15 OR SIMILAR
5. SLIP DOWEL
6. EXPANSION JOINT

SEE STEEL PLAN FOR FABRICATION + FINISH NOTES

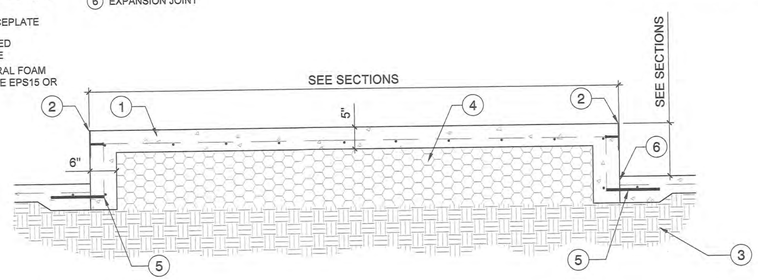

12 CIRCLE MANUAL PAD

3/4" = 1'-0"

P-PIP-LAN-18

1. 4000 PSI CONCRETE FLAT WORK WITH #3 REBAR @ 16" O.C. B.W.
2. STRUCTURAL FOAM FILL - TO BE EPS15 OR SIMILAR
3. 4000 PSI SHOTCRETE WITH #3 REBAR @ 12" O.C. B.W.*
4. COMPACTED SUB-GRADE
5. COLD JOINT / KEY JOINT
6. SLIP DOWEL

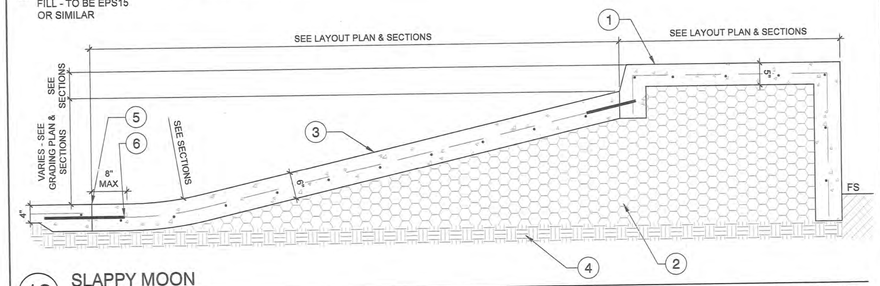

13 SLAPPY MOON

3/4" = 1'-0"

P-PIP-LAN-100

1. 1/8" MIN. ROUTED EDGE GROUND SMOOTH
2. 1.5" x 2" x 3/16" THICK STEEL EDGING -SEE STEEL PLAN FOR LOCATION
3. COPING ANCHOR, 3/8" X 4" MIN. NELSON STUD OR SIMILAR @ 18" O.C.
4. 1/8" TOOLED EDGE BOTH SIDES
5. TYPICAL STEEL REINFORCEMENT
6. SKATE ELEMENT

SEE STEEL PLAN FOR FABRICATION + FINISH NOTES

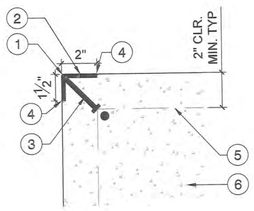

14 STEEL EDGING

3" = 1'-0"

P-PIP-PER1-12

SKATE ELEMENTS TO BE PROVIDED BY
SPOHN RANCH SKATEPARKS
CONTACT VINCE ONEL
VINCE@SPOHNRANCH.COM
626-330-5803

CONSTRUCTION DETAILS

DIGALERT — DIAL BEFORE YOU DIG — TWO WORKING DAYS BEFORE YOU DIG — TOLL FREE 1-800-227-2600 — A PUBLIC SERVICE BY UNDERGROUND SERVICE ALERT

DATE	BY	MARK	REVISIONS	APPR.	DATE
				CITY	

ENGINEER

DESIGNED BY: GM, AL DRAWN BY: AL CHECKED BY: DG

SEAL: LICENSED LANDSCAPE ARCHITECT — ZACHARY MOSKOWITZ 6728 — STATE OF CALIFORNIA — Signature 8/31/2025 — Renewal Date 8/30/2023 — Date

APPROVED BY: DATE 08-03-2023
CITY ENGINEER
R.C.E. NO. _____ EXP. DATE _____

PREPARED BY: DATE _____
LANDSCAPE ARCHITECT
L.L.A NO. _____ EXP. DATE _____

BENCHMARK

SCALE AS SHOWN

DATE

RHA LANDSCAPE ARCHITECTS PLANNERS, INC

6800 INDIANA AVENUE,
SUITE #245
RIVERSIDE, CA 92506
LIC. #2799
PH. (951) 781-1930
FAX (951) 686-8091

CITY OF PERRIS
COPPER CREEK PARK
PARK IMPROVEMENT PLANS

FOR CITY OF PERRIS W.O.

SHEET NO. **SK9.1** OF XX SHEETS

FILE NO. RHA# 22154

PRECISE GRADING PLAN
FOR
COPPER CREEK PARK
CITY OF PERRIS

GENERAL NOTES

1. THESE DRAWINGS AND THE DATA HEREIN ARE MADE PART OF THE SPECIFICATIONS.
2. ALL WORK INDICATED ON THESE PLANS SHALL BE PERFORMED IN ACCORDANCE WITH THE LATEST EDITION ALL ADDENDA THERETO OF THE STANDARD SPECIFICATIONS/SPECIAL PROVISIONS AND STANDARD PLANS OF THE COUNTY OF RIVERSIDE, THE STATE OF CALIFORNIA DEPARTMENT OF TRANSPORTATION (CALTRANS) STANDARD PLANS AND SPECIFICATIONS, THE STANDARD SPECIFICATIONS FOR PUBLIC WORKS CONSTRUCTION (SSPWC), STANDARD PLANS FOR PUBLIC WORKS CONSTRUCTION (SPPWC), CALIFORNIA MANUAL ON UNIFORM TRAFFIC CONTROL DEVICES (MUTCD), AND CALTRANS HIGHWAY DESIGN MANUAL.
3. APPROVAL OF THIS PLAN BY THE CITY DOES NOT CONSTITUTE A REPRESENTATION AS TO THE ACCURACY OF THE LOCATION OR OF THE EXISTENCE OR NON-EXISTENCE OF ANY UNDERGROUND UTILITY PIPE OR STRUCTURE WITHIN THE LIMITS OF THIS PROJECT. THE CONTRACTOR SHALL ASSUME FULL RESPONSIBILITY FOR THE PROTECTION OF ALL UTILITIES WITHIN THE LIMITS OF THE PROJECT. CONTRACTOR SHALL CONTACT UNDERGROUND SERVICE ALERT 48 HOURS PRIOR TO START OF WORK.
4. CONSTRUCTION ACTIVITIES SHALL BE LIMITED TO 7:00AM TO 6:00PM MONDAY TO FRIDAY. CONTRACTOR SHALL SUBMIT A WORK REQUEST 24 HOURS IN ADVANCE TO THE CITY ENGINEER FOR REVIEW AND APPROVAL OF ANY SCHEDULED WORK ON WEEKENDS AND HOLIDAYS, OVERTIME INSPECTIONS SHALL BE AT THE CONTRACTOR'S EXPENSE.
5. THE CONTRACTOR SHALL PAY ALL FEES AND OBTAIN ALL PERMITS AS REQUIRED BY THE UTILITY COMPANIES AND THE REQUIREMENTS OF THE CITY.
6. PRIOR TO CONSTRUCTION WORK, ALL CONTRACTORS, INCLUDING SUBCONTRACTORS, SHALL OBTAIN A CITY BUSINESS LICENSE AND AN ENCROACHMENT PERMIT.
7. ALL CONTRACTORS SHALL HAVE VALID CERTIFICATES OF WORKMAN'S COMPENSATION ON FILE WITH THE APPROPRIATE AGENCIES.
8. CONTRACTOR SHALL, PRIOR TO COMMENCEMENT OF WORK, FIELD VERIFY ALL EXISTING PROJECT CONDITIONS, INCLUDING DIMENSIONS AND UTILITY LOCATIONS AND UTILITY SIZES.
9. FIELD INFORMATION OF DISCREPANCIES SHALL BE RECORDED ON A REPRODUCIBLE DOCUMENT AND IMMEDIATELY TRANSMITTED TO THE ENGINEER FOR PROJECT RECORD, COORDINATION, AND NECESSARY RESOLUTION PRIOR TO CONTAINING WITH WORK
10. ALL WORK SHALL CONFORM TO THE LATEST ADOPTED EDITIONS OF ALL APPLICABLE BUILDING CODES, THE AMERICANS WITH DISABILITIES ACT, AS WELL AS ALL OTHER LOCAL GOVERNING CODES AND ORDINANCES.
11. STATE LAW SB 3019 REQUIRES THE CONTRACTOR TO OBTAIN AN IDENTIFICATION NUMBER FROM UNDERGROUND SERVICE ALERT PRIOR TO THE ISSUANCE OF A CITY ENCROACHMENT PERMIT. THE CONTRACTOR SHALL NOTIFY UNDERGROUND SERVICE ALERT TWO FULL WORKING DAYS (48 HOURS MINIMUM) IN ADVANCE OF ANY CONSTRUCTION ACTIVITIES.
12. THE CONTRACTOR SHALL ASCERTAIN THE SIZE AND TRUE VERTICAL AND HORIZONTAL LOCATIONS OF ALL UNDERGROUND UTILITIES AND SHALL BE RESPONSIBLE FOR ANY REPAIRS TO ANY DAMAGED PUBLIC AND/OR PRIVATE UTILITIES, SHOWN OR NOT SHOWN HEREON.
13. THE CONTRACTOR SHALL BE RESPONSIBLE FOR LOCATING AND IDENTIFYING UNDERGROUND UTILITY LINES AND SUBSTRUCTURES AND SHALL PROTECT THEM FROM DAMAGE.
14. THE APPROXIMATE LOCATIONS OF KNOWN EXISTING UNDERGROUND UTILITIES ARE SHOWN ON THIS PLAN. THE UTILITIES ARE PLOTTED FROM RECORD AND FIELD DATA. THE ENGINEER ASSUMES NO LIABILITY AS TO THE EXACT LOCATION OF SAID LINES WHETHER SHOWN OR NOT SHOWN ON THE PLANS. THE CONTRACTOR IS TO NOTIFY ALL UTILITY COMPANIES PRIOR TO WORK OR EXCAVATION TO DETERMINE THE EXACT LOCATIONS OF UNDERGROUND LINES
15. PRIOR TO ANY CONSTRUCTION WORK WHICH COULD DAMAGE OR CONFLICT WITH UNDERGROUND STRUCTURES OR UTILITIES, THE CONTRACTOR SHALL EXCAVATE INSPECTION HOLES TO DETERMINE THE LOCATION AND DEPTH OF SAID STRUCTURES AND UTILITIES IN THE VICINITY OF, OR WHICH MAY BE AFFECTED BY, THE PROPOSED IMPROVEMENT WORK.
16. SHOULD ANY OF THE EXISTING UTILITIES OR ANY OTHER FACILITIES CONFLICT WITH THE PROPOSED IMPROVEMENTS, THE CONTRACTOR SHALL NOTIFY THE ENGINEER AND AWAIT THE RELOCATION AND/OR PROVIDE AN ALTERNATE DESIGN.
17. DURING THE PERIOD OF CONSTRUCTION, THE CONTRACTOR SHALL FURNISH, ERECT AND MAINTAIN SUCH WARNINGS, SIGNS, STOP SIGNS, BARRICADES AND OTHER SAFETY MEASURES IN CONFORMANCE WITH THE W.A.T.C.H. MANUAL.
18. CONTRACTOR SHALL REINSTALL PAVEMENT MARKINGS, STRIPING AND SIGNING THAT HAS BEEN DISTURBED BY HIS OPERATION.
19. THE CONTRACTOR SHALL PROVIDE SAFE AND CONTINUOUS PASSAGE FOR LOCAL PEDESTRIAN AND VEHICULAR TRAFFIC AT ALL TIMES.
20. ANY CONTRACTOR PERFORMING WORK ON THIS PROJECT SHALL FAMILIARIZE HIMSELF WITH THE SITE AND SHALL BE RESPONSIBLE FOR ANY DAMAGE TO EXISTING FACILITIES RESULTING DIRECTLY OR INDIRECTLY FROM HIS OPERATIONS, WHETHER OR NOT SUCH FACILITIES ARE SHOWN ON THE PLANS.
21. THE CONTRACTOR SHALL SO CONDUCT HIS OPERATIONS AS TO OFFER THE LEAST POSSIBLE OBSTRUCTION AND INCONVENIENCE TO THE PUBLIC, AND HE SHALL HAVE UNDER CONSTRUCTION NO GREATER LENGTH OR AMOUNT OF WORK THAN HE CAN PROSECUTE PROPERLY WITH DUE REGARD TO THE RIGHTS OF THE PUBLIC.
22. THE CONTRACTOR SHALL PROVIDE AND MAINTAIN SUCH FENCES, BARRIERS, DIRECTIONAL SIGNS, LIGHTS , AND FLAG-MEN AS ARE NECESSARY TO GIVE ADEQUATE WARNING TO THE PUBLIC AT ALL TIMES OF ANY DANGEROUS CONDITIONS TO BE ENCOUNTERED AS A RESULT OF THE CONSTRUCTION WORK AND TO GIVE DIRECTIONS TO THE PUBLIC.
23. THE CONTRACTOR SHALL EXERCISE DUE CARE TO AVOID INJURY TO EXISTING IMPROVEMENTS OR FACILITIES, UTILITY FACILITIES, ADJACENT PROPERTY, AND TREES AND SHRUBBERY THAT ARE NOT TO BE REMOVED. ANY DAMAGED ITEMS SHALL BE REPLACED AT THE CONTRACTOR'S EXPENSE.
24. IN ACCORDANCE WITH GENERALLY ACCEPTED CONSTRUCTION PRACTICES, THE CONTRACTOR SHALL BE SOLELY AND COMPLETELY RESPONSIBLE FOR CONDITIONS OF THE JOB SITE, INCLUDING SAFETY OF ALL PERSONS AND PROPERTY DURING PERFORMANCE OF THE WORK, AND THE CONTRACTOR SHALL FULLY COMPLY WITH ALL STATE AND FEDERAL LAWS, RULES, REGULATIONS, AND ORDERS RELATING TO SAFETY TO THE PUBLIC AND WORKMEN.
25. STREET CUT PERMITS MUST BE OBTAINED FROM THE PUBLIC WORKS DEPARTMENT.
26. CAL-OSHA PERMITS SHALL BE REQUIRED FOR ANY TRENCH WORK OVER 5' IN DEPTH. EVIDENCE MUST BE PRESENTED TO THE CITY PRIOR TO PERMIT ISSUANCE.
27. ACCURATE AS-BUILT DRAWINGS SHALL BE GENERATED BY CONTRACTOR DURING CONSTRUCTION AND SUBMITTED TO OWNER UPON COMPLETION OF FINAL PUNCH LIST, BUT PRIOR TO REQUEST FOR FINAL PAYMENT.
28. APPROVAL OF THESE PLANS BY THE CITY OR ITS AGENTS SHALL NOT RELIEVE THE CONTRACTOR OR THE APPLICANT FROM THE RESPONSIBILITY FOR THE CORRECTION OF ERRORS OR OMISSIONS DISCOVERED DURING CONSTRUCTION. UPON REQUEST, THE APPROPRIATE REVISIONS SHALL BE SUBMITTED TO THE CITY ENGINEER FOR REVIEW AND APPROVAL.
29. PRIOR TO TAKING WATER FROM A FIRE HYDRANT, THE CONTRACTOR SHALL MAKE ARRANGEMENTS TO OBTAIN A CITY HYDRANT WATER METER.
30. THE CONTRACTOR SHALL MAINTAIN DUST CONTROL AT ALL TIMES.
31. ALL CONSTRUCTION DEBRIS INCLUDING DUST, DIRT, AND ANY TYPE OF SCRAP MUST BE DISPOSED OF THROUGH THE SOLID WASTE SYSTEM. IT IS STRICTLY PROHIBITED TO WASH ANY DUST, DIRT, SCRAP OR OTHER MATERIAL TO THE STREET AND/OR STORM DRAIN SYSTEM.
32. THE ENGINEER ACCEPTS NO RESPONSIBILITY FOR THE ACCURACY OF THE FINDINGS IN THE SOILS REPORT, NOR FOR THE FINAL RECOMMENDATIONS. SHOULD ANY UNUSUAL CONDITIONS BECOME APPARENT DURING GRADING OR FOUNDATION CONSTRUCTION NOTIFY THE SOILS ENGINEER FOR INSTRUCTIONS PRIOR TO CONTINUING WORK.
33. CONTRACTOR SHALL VERIFY, AND BE RESPONSIBLE FOR ALL WORK AND MATERIAL – INCLUDING THOSE FURNISHED BY SUBCONTRACTORS.
34. WRITTEN DIMENSIONS TAKE PRECEDENCE OVER SCALED SIZES. DO NOT SCALE DRAWINGS TO DETERMINE ANY LOCATIONS. THE ENGINEER SHALL BE NOTIFIED OF ANY DISCREPANCIES, PRIOR TO CONTINUING.
35. HAULING ROUTE PLAN SHALL BE SUBMITTED TO THE CITY ENGINEER FOR REVIEW AND APPROVAL PRIOR TO START OF DIRT IMPORT/EXPORT.
36. ALL DEMOLITION AND CUTTING SHALL BE PREFORMED IN A MANNER AND BY METHODS WHICH ENDURE AGAINST DAMAGE TO EXISTING WORK.

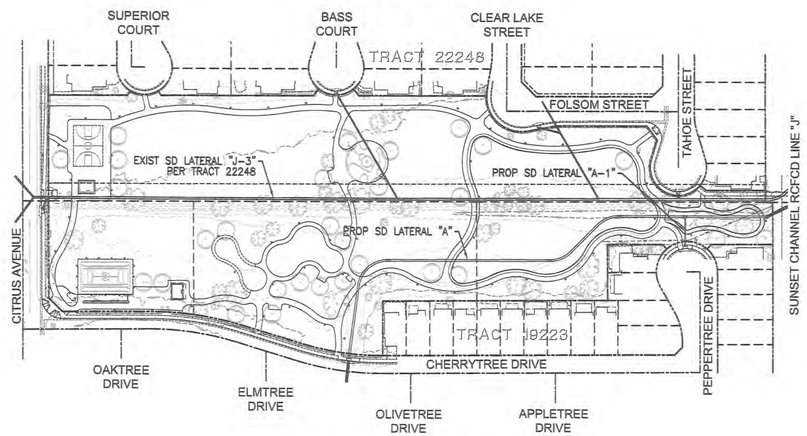

INDEX MAP
SCALE: 1"=120'

SOURCE OF TOPOGRAPHY

TOPOGRAPHY PREPARED UTILIZING BOTH AERIAL PHOTOGRAMMETRY AND CONVENTIONAL GROUND SURVEY METHODS BY DAVID BECKWITH AND ASSOCIATES, INC BETWEEN NOVEMBER 7, 2022 AND NOVEMBER 10, 2022

EARTHWORK QUANTITIES

CUT	654	CY
FILL	8,774	CY

EARTHWORK QUANTITIES ARE FOR PLAN CHECKING PURPOSES ONLY. CONTRACTOR TO PERFORM THEIR OWN TAKE-OFFS FOR CONSTRUCTION. ENGINEER MAKES NO WARRANTIES TO THE ACCURACY OF SAID QUANTITIES.

SURVEYOR'S NOTE

THIS MAP IS NOT A BOUNDARY SURVEY. NO PROPERTY CORNERS HAVE BEEN SET AS PART OF THIS WORK.

SURVEY MONUMENTS FOUND IN THE COURSE OF THIS MAPPING HAVE BEEN SET BY OTHERS, AND USED ONLY AS REFERENCE FOR PURPOSES OF TOPOGRAPHIC MAPPING, WITHOUT THE VERIFICATION OF ITS AGREEMENT WITH APPLICABLE LEGAL DESCRIPTIONS AND SENIORITY OF DEEDS.

RELATION OF TOPOGRAPHIC FEATURES (FENCES, WALLS, TREES, POWER POLES, ETC.) TO PROPERTY LINES SHOWN ON THIS MAP IS SUBJECT TO THE ADJUSTMENTS TO ANY BOUNDARY SURVEY THAT IS TO BE DONE ON THE PROPERTY.

THIS SURVEY WAS PREPARED WITHOUT THE BENEFIT OF A TITLE REPORT. EASEMENTS, IF ANY, ARE NOT SHOWN.

PRIVATE ENGINEER'S NOTICE TO CONTRACTOR

1. ALL AVAILABLE RECORDS FROM THE OWNER AND UTILITY COMPANIES HAVE BEEN INVESTIGATED AND ALL KNOWN UTILITY CONDUITS AND SUBSTRUCTURES ARE SHOWN HEREON. IT SHALL BE THE RESPONSIBILITY OF THE CONTRACTOR TO LOCATE ALL UTILITY CONDUITS AND SUBSTRUCTURES SHOWN OR NOT SHOWN ON THESE PLANS BY "POT HOLING" PRIOR TO CONSTRUCTION. THE CONTRACTOR SHALL BEAR THE TOTAL EXPENSE OF REPAIR AND/OR REPLACEMENT OF SAID UTILITY CONDUITS AND SUBSTRUCTURES DAMAGED BY HIS OPERATION IN CONNECTION WITH THE LIMITS OF THIS PROJECT. CONTRACTOR TO POT HOLE AND VERIFY EXACT VERTICAL AND HORIZONTAL LOCATION OF ALL EXISTING UTILITY CROSSING PRIOR TO COMMENCING CONSTRUCTION. THE CONTRACTOR IS TO NOTIFY THE ENGINEER OF RECORD IMMEDIATELY OF ANY DISCREPANCIES BETWEEN THE FIELD CONDITIONS AND THE PROJECT DRAWINGS. COMMENCEMENT OF WORK INDICATES ACCEPTANCE OF ALL EXISTING UTILITIES SHOWN OR NOT SHOWN BY THE CONTRACTOR.
2. EXISTING UTILITIES SHALL BE MAINTAINED IN-PLACE BY THE CONTRACTOR, UNLESS OTHERWISE NOTED. RELOCATION OR REMOVAL OF ANY EXISTING UTILITIES NOT COVERED BY THESE PLANS SHALL BE PERFORMED BY OR UNDER THE DIRECTION OF THE RESPECTIVE UTILITY OWNERS AT THE EXPENSE OF THE DEVELOPER.
3. THE CONTRACTOR SHALL DEFEND, INDEMNIFY, AND HOLD THE OWNER AND ENGINEER OF RECORD HARMLESS FROM ANY AND ALL LIABILITY, REAL OR ALLEGED, IN CONNECTION WITH THE PERFORMANCE OF WORK ON THIS PROJECT, EXCEPT FOR LIABILITY ARISING FROM THE SOLE NEGLIGENCE OF THE OWNER AND/OR THE ENGINEER OF RECORD.
4. IT SHALL BE THE RESPONSIBILITY OF THE CONTRACTOR TO VERIFY ALL DIMENSIONS AND CONDITIONS SHOWN HEREON AT THE JOB SITE PRIOR TO ANY CONSTRUCTION. THE ENGINEER OF RECORD SHALL BE NOTIFIED OF ANY DISCREPANCIES. REVISIONS TO THE PLAN SHALL BE APPROVED BY THE ENGINEER IN WRITING PRIOR TO IMPLEMENTATION.
5. UNAUTHORIZED CHANGES & USES: THE ENGINEER PREPARING THESE PLANS WILL NOT BE RESPONSIBLE FOR, OR LIABLE FOR, UNAUTHORIZED CHANGES TO OR USES OF THESE PLANS. ALL CHANGES TO THE PLANS MUST BE IN WRITING AND MUST BE APPROVED BY THE PREPARER OF THESE PLANS.

SURVEY MONUMENT NOTE

SURVEY MONUMENTS THAT EXIST AS SHOWN ON RECORDED MAPS, HIGHWAY MAPS, OR POINTS THAT PROVIDE SURVEY CONTROL WITHIN THE CONSTRUCTION AREAS, SHALL BE LOCATED AND REFERENCED BY A LICENSED LAND SURVEYOR OR REGISTERED CIVIL ENGINEER (AUTHORIZED TO PRACTICE LAND SURVEYING). BEFORE THE START OF CONSTRUCTION, CORNER RECORDS SHALL BE FILED WITH THE COUNTY SURVEYOR. THESE CORNER RECORDS SHALL DESCRIBE THE MONUMENTS FOUND WITH TIE DISTANCES TO REFERENCE POINTS FOR THE RESETTING OF SURVEY MONUMENTS. WHEN CONSTRUCTION IS COMPLETED, ANY DISTURBED MONUMENTS SHALL BE REPLACED AND CORNER RECORDS SHALL BE FILED WITH THE COUNTY SURVEYOR SHOWING THE NEW MONUMENTS.

SHEET INDEX

TITLE SHEET	C0.01/1
GENERAL NOTES	C0.02/2
PRECISE GRADING PLAN	C1.01/3
PRECISE GRADING PLAN	C1.02/4
PRECISE GRADING PLAN	C1.03/5
STORM DRAIN PLAN	C2.01/6
DETAIL SHEET	C3.01/7
AGENCY STANDARD PLANS	C3.02/8
AGENCY STANDARD PLANS	C3.03/9

OWNER

CITY OF PERRIS
227 NORTH D STREET
PERRIS, CA 92570
PHONE: 951.943.6603
CONTACT: WILLIAM EVANS

CIVIL ENGINEER/LAND SURVEYOR

DAVID BECKWITH AND ASSOCIATES, INC
9431 HAVEN AVENUE, SUITE 232
RANCHO CUCAMONGA, CA 91730
PHONE: 714.349.7007
CONTACT: DAVID M BECKWITH, PE, PLS

GEOTECHNICAL ENGINEER

CONVERSE CONSULTANTS
2021 RANCHO DRIVE, SUITE 1
REDLANDS, CA 92373
PHONE: 909.474.2839
FAX: 909.796.7675
PROJECT NO: 22-81-205-01, DATED 12/28/2022
CONTACT: HASHMI QUAZI, PhD, PE, GE

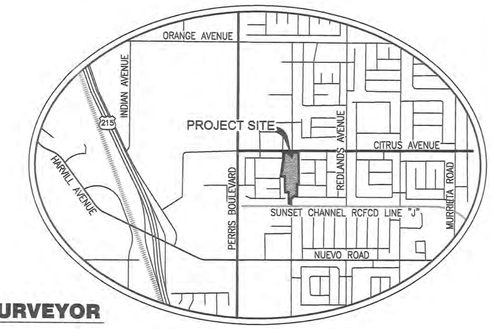

VICINITY MAP
NTS

LANDSCAPE ARCHITECT

RHA LANDSCAPE ARCHITECTS-PLANNERS, INC
6800 INDIANA AVENUE, SUITE 245
RIVERSIDE, CA 92506
PHONE: 951.781.1930
CONTACT: DOUG GROVE, RLA

DECLARATION ENGINEER OF RECORD

I HEREBY DECLARE THAT I AM THE ENGINEER OF WORK FOR THIS PROJECT AND I HAVE EXERCISED RESPONSIBLE CHARGE OVER THE DESIGN OF THE PROJECT AS DEFINED IN SECTION 6703 OF THE BUSINESS AND PROFESSIONAL CODE, AND THAT THE DESIGN IS CONSISTENT WITH CURRENT STANDARDS. I UNDERSTAND THAT THE CHECK OF PROJECT DRAWINGS AND SPECIFICATIONS BY THE CITY OF PERRIS IS CONFINED TO A REVIEW ONLY AND DOES NOT RELIEVE ME, AS ENGINEER OF WORK, OF MY RESPONSIBILITIES FOR PROJECT DESIGN.

DAVID M BECKWITH, PE, PLS, QSD, QSP, QISP — NAME OF SIGNER
SIGNATURE OF SIGNER
07/26/2023 — DATE

ENGINEER OF RECORD LID COMPLIANCE STATEMENT

AS THE ENGINEER OF THE PROJECT, I HAVE REVIEWED THE LOW IMPACT DEVELOPMENT (LID) STANDARDS MANUAL BY THE COUNTY OF SAN BERNARDINO, AND HAVE PROPOSED THE IMPLEMENTATION OF THE PERMANENT BEST MANAGEMENT PRACTICES (BMPs) APPLICABLE TO EFFECTIVELY MINIMIZE THE NEGATIVE IMPACTS OF THE PROJECT'S STORMWATER RUNOFF. THE SELECTED BMPs WILL BE INSTALLED PER THE APPROVED PLANS AND AS RECOMMENDED BY THE MANUFACTURER AS APPLICABLE.

DAVID M BECKWITH, PE, PLS, QSD, QSP, QISP — NAME OF SIGNER
SIGNATURE OF SIGNER
07/26/2023 — DATE

SITE LID INFORMATION

PRE-CONSTRUCTION CONDITION (379,192.2 SF TOTAL AREA)			
PERVIOUS		IMPERVIOUS	
AREA (SF)	PERCENTAGE (%)	AREA (SF)	PERCENTAGE (%)
354,277.1	93.4	24,915.1	6.6
POST CONSTRUCTION CONDITION (379,192.2 SF TOTAL AREA)			
PERVIOUS		IMPERVIOUS	
AREA (SF)	PERCENTAGE (%)	AREA (SF)	PERCENTAGE (%)
326,404.6	86.1	52,787.6	13.9
AREA OF TOTAL IMPERVIOUS AREA BEING R&R'd		IMPERVIOUS AREAS BEING ADDED TO TOTAL SITE	
AREA (SF)	PERCENTAGE (%)	AREA (SF)	PERCENTAGE (%)
18,335.4	34.7	34,452.2	9.1

LEGEND

(COMM)	EXISTING COMMUNICATIONS LINE	FF	FINISHED FLOOR		PROPOSED AC PAVEMENT
(IRR)	EXISTING IRRIGATION	FG	FINISHED GROUND		PROPOSED PCC PAVEMENT
(E)	EXISTING ELECTRICAL	FL	FLOWLINE		PROPOSED DG SURFACE
(G)	EXISTING GAS	FS	FINISHED SURFACE		
(SS)	EXISTING SANITARY SEWER	GB	GRADE BREAK		
(SD)	EXISTING STORM DRAIN	HP	HIGH POINT		
(SL)	EXISTING STREET LIGHT POWER LINE	INV	INVERT	SPPWC	STANDARD PLANS FOR PUBLIC WORKS CONSTRUCTION
(W)	EXISTING WATER	LP	LOW POINT		
(?)	EXISTING UNKNOWN UTILITY	NAP	NOT A PART		
x	EXISTING CHAIN LINK FENCE	PIP	PROTECT IN PLACE	SSPWC	STANDARD SPECIFICATIONS FOR PUBLIC WORKS CONSTRUCTION
	EXISTING FLOWLINE	R	RIDGE		
	EXISTING TOP/TOE OF SLOPE	RIM	TOP OF CLEANOUT		
(1020)	EXISTING MAJOR CONTOUR	TC	TOP OF CURB	RCFCWCD	RIVERSIDE COUNTY FLOOD CONTROL & WATER CONSERVATION DISTRICT
	EXISTING MINOR CONTOUR	TG	TOP OF GRATE		
	SAWCUT EXISTING PAVEMENT	TW	TOP OF WALL		

RISK LEVEL 1, WDID/App ID _____

DIGALERT — DIAL BEFORE YOU DIG — TWO WORKING DAYS BEFORE YOU DIG — TOLL FREE 811 — A PUBLIC SERVICE BY UNDERGROUND SERVICE ALERT

MARK	BY	DATE	REVISIONS	APPR	DATE
				MJPA	

ENGINEER

BENCHMARK
POINT 100
SCRIBED "X" FLUSH ON CONCRETE SLAB APPROXIMATELY 83.5' EAST AND 16.3' SOUTH OF THE SOUTHEAST CORNER OF THE RESTROOM BUILDING, ESTABLISHED AS TEMPORARY BENCH.
ELEVATION: 1327.418

BASIS OF BEARINGS
THE BEARINGS SHOWN HEREON ARE BASED UPON THE THE BEARING OF N00°12'16"W ALONG THE CENTER LINE OF FOLSOM STREET BETWEEN TAHOE STREET AND CLEAR LAKE STREET AS ESTABLISHED PER TRACT No. 22248 IN MB 214/016-020, IN THE CITY OF PERRIS, COUNTY OF RIVERSIDE, STATE OF CALIFORNIA.

APPROVED BY — DATE 08.03.2023 — CITY ENGINEER — RCE No.: EXPIRED
PREPARED BY — DATE 07/26/2023 — DAVID MICHAEL BECKWITH — RCE No.: C73761

ENGINEER'S SEAL: REGISTERED PROFESSIONAL ENGINEER — DAVID MICHAEL BECKWITH — No. 73761 — Exp. 06/30/25 — CIVIL — STATE OF CALIFORNIA

PREPARED BY
DAVID BECKWITH AND ASSOCIATES INC
Civil & Structural Engineering - Land Surveying - QSD/QSP Environmental Services
9431 Haven Avenue, Suite 232
Rancho Cucamonga, CA 91730
(T) 714.349.7007 (F) 714.948.4471
www.davidbeckwithandassociates.com

CITY OF PERRIS
COPPER CREEK PARK
PARK IMPROVEMENT PLANS
PRECISE GRADING PLAN
TITLE SHEET

FOR CITY OF PERRIS — W.O. _____

SHEET No. C0.01
1 OF 09 SHEETS
FILE No. PA-1378

D:\OneDrive - Dbainc\Projects\2022\2022-19_Copper Creek Park\Grading\PGP\20221ppg01ts.dwg - LAST PLOTTED ON Wed 07/26/23 - 03:29PM BY DBAinc

GENERAL GRADING NOTES

1. ALL WORK SHALL BE DONE IN ACCORDANCE WITH THE APPROVED GRADING PLAN, APPENDIX J OF THE CALIFORNIA BUILDING CODE, LATEST EDITION. DEVIATION FROM THE APPROVED GRADING PLAN SHALL BE APPROVED PRIOR TO THE COMMENCEMENT OF CONSTRUCTION.
2. HOURS OF OPERATION SHALL BE FROM 7:00 AM TO 8:00 PM, MONDAY THROUGH FRIDAY. OTHER HOURS SHALL REQUIRE WRITTEN AUTHORIZATION FROM THE CITY ENGINEER OR THE BUILDING OFFICIAL. ROAD/LANE CLOSURES SHALL BE LIMITED TO THE HOURS OF 8:30 AM TO 3:30 PM ON WEEKDAYS.
3. PRIOR TO CONSTRUCTION WORK, ALL CONTRACTORS, INCLUDING SUBCONTRACTORS, SHALL OBTAIN A CITY BUSINESS LICENSE AND AN ENCROACHMENT PERMIT.
4. NO WORK SHALL BY UNDERTAKEN WITHOUT OBTAINING A PERMIT FROM THE CITY. THE PUBLIC WORKS INSPECTOR SHALL BE NOTIFIED AT LEAST 24 HOURS IN ADVANCE OF REQUIRED INSPECTIONS.
5. THE CONTRACTOR SHALL REPAIR OR REPLACE ALL EXISTING DAMAGED OR ALTERED PUBLIC IMPROVEMENTS AS REQUIRED BY THE CITY ENGINEER.
6. ANY MATERIAL INCORPORATED AS PART OF THE COMPACTED FILL SHALL BE APPROVED BY A SOILS ENGINEER. INSPECTION AND CERTIFICATION OF FILL PLACEMENT SHALL BE PROVIDED BY A SOILS ENGINEER DURING THE PROCESS OF GRADING. NO ROCK OR SIMILAR MATERIAL GREATER THAN EIGHT INCHES IN DIAMETER SHALL BE PLACED IN THE FILL UNLESS RECOMMENDATIONS FOR SUCH PLACEMENT HAVE BEEN SUBMITTED BY A SOILS ENGINEER IN ADVANCE AND APPROVED BY THE CITY ENGINEER.
7. IT SHALL BE THE CONTRACTOR'S RESPONSIBILITY TO VERIFY THE LOCATION OF ALL UTILITIES OR STRUCTURES, ABOVE OR BELOW GROUND, SHOWN OR NOT SHOWN ON THESE PLANS. HE SHALL BE HELD RESPONSIBLE FOR DAMAGE CAUSED BY HIS OPERATIONS. THE CITY ENGINEER SHALL BE NOTIFIED OF ANY CONFLICTS. CONSTRUCTION SHALL BE TERMINATED AND STREETS RESTORED UNTIL CORRECTIVE MEASURES HAVE BEEN APPROVED BY THE CITY ENGINEER.
8. ANY UNKNOWN SUB-SURFACE STRUCTURES ENCOUNTERED DURING CONSTRUCTION SHALL BE IMMEDIATELY BROUGHT TO THE ATTENTION OF A SOILS ENGINEER AND THE CITY ENGINEER PRIOR TO PROCEEDING WITH GRADING OPTIONS.
9. ALL AREAS SHALL SLOPE A MINIMUM OF 1.0% TO STREET, DRIVE OR SWALE UNLESS SHOWN OTHERWISE.
10. MAXIMUM FILL SLOPE SHALL NOT EXCEED 2:1 UNLESS APPROVED BY A SOILS ENGINEER. FILL SLOPES SHALL HAVE NOT LESS THAN 90% RELATIVE COMPACTION AS DETERMINED BY ASTM D 1557-70 AND CERTIFIED BY A SOILS ENGINEER. TOES OF SLOPES SHALL BE LOCATED PER APPENDIX J OF THE CALIFORNIA BUILDING CODE.
11. SEPARATE PERMITS SHALL BE REQUIRED FOR ANY IMPROVEMENT WORK IN THE PUBLIC RIGHT-OF-WAY.
12. BACKFILL OF TRENCHES SHALL BE CERTIFIED BY A SOILS ENGINEER (90% MINIMUM COMPACTION) PER CITY STANDARDS AND SPECIFICATIONS. EXCAVATIONS, CONSTRUCTION AND INSTALLATIONS IN THE PUBLIC RIGHT-OF-WAY SHALL REQUIRE INSPECTION BY THE CITY INSPECTOR. FAILURE TO HAVE INSPECTION MAY REQUIRE RE-EXCAVATION OF THE CONSTRUCTION.
13. THE CONTRACTOR SHALL SWEEP DAILY AND CLEAN UP ALL VISIBLE DIRT, SILT, SAND OR OTHER SUBSTANCES DEPOSITED IN PUBLIC STREETS BY CONSTRUCTION ACTIVITIES ASSOCIATED WITH THE PROJECT.
14. AN "AS-BUILT" OR RECORD DRAWING OF THE GRADING PLAN SHALL BE SUBMITTED BY THE DEVELOPER ALONG WITH A FINAL GRADE CERTIFICATION PRIOR TO AN ISSUANCE OF OCCUPANCY.
15. THE CITY ENGINEER MAY REQUIRE PROTECTIVE MEASURES AND/OR TEMPORARY DRAINAGE PROVISIONS TO PROTECT ADJOINING PROPERTIES DURING GRADING OPERATIONS AND PERIODS OF HEAVY RAINFALL. EROSION CONTROL PLANS SHALL BE APPROVED FOR THE PROJECT PRIOR TO ISSUANCE OF A GRADING PERMIT.
16. THESE PLANS ARE APPROVED FOR GRADING ONLY. RETAINING WALLS AND NON-RETAINING WALLS SHALL REQUIRE SEPARATE PERMITS AND INSPECTION.
17. ALL EARTH MOVING OPERATIONS SHALL CEASE IF WIND VELOCITIES EXCEED 25 M.P.H. THE SITE SHALL BE KEPT REGULARLY WATERED TO MITIGATE BLOWING DUST FOR THE DURATION OF THE HIGH WINDS.
18. THE DEVELOPER SHALL BE RESPONSIBLE FOR SUBMITTING TO THE CITY PROOF THAT A NOTICE OF INTENT (NOI) FOR THE GENERAL PERMIT FOR STORM WATER DISCHARGES ASSOCIATED WITH CONSTRUCTION ACTIVITY HAS BEEN FILED WITH AND APPROVED BY THE STATE WATER RESOURCES CONTROL BOARD (SWRCB). CONSTRUCTION SHALL NOT COMMENCE WITHOUT THIS APPROVAL. THE DEVELOPER SHALL BE RESPONSIBLE TO COMPLY WITH THE GENERAL CONSTRUCTION ACTIVITY STORM WATER PERMIT BY IMPLEMENTING THEIR STORM WATER POLLUTION PREVENTION PLAN (SWPPP) FOR THE DURATION OF THE PROJECT.
19. THE CONTRACTOR SHALL WATER ALL ACTIVE CONSTRUCTION SITES AND UNPAVED ROAD SURFACES AS NECESSARY TO CONTROL BLOWING DUST.
20. THE CONTRACTOR SHALL WATER OR COVER ANY STORED OR STOCKPILED SOIL, SAND OR OTHER FINE PARTICLE SUBSTANCE OR SOIL AMENDMENTS AS REQUIRED TO CONTROL BLOWING DUST.
21. GRADING ACTIVITIES SHALL BE SCHEDULED TO MINIMIZE THE AREA OF EXPOSED EXCAVATED SOIL AND SHALL ESTABLISH VEGETATIVE COVER OR APPLY STABILIZATION MATERIAL TO EXPOSED SURFACE AREAS IN A TIMELY MANNER, FOLLOWING GRADING AND CONSTRUCTION.
22. ALL EQUIPMENT/TRUCKS EXPORTING SOIL, CEMENT OR OTHER DRY, POWDERY SUBSTANCES OR BUILDING MATERIALS ON ANY PUBLIC STREET SHALL BE COVERED.
23. PARKING OF EMPLOYEE VEHICLES ON UNPAVED AREAS OF THE CONSTRUCTION SITE SHALL BE PROHIBITED.
24. A SIX-FOOT HIGH SCREENING FENCE WITH FABRIC SHALL BE INSTALLED ALONG THE PROJECT BOUNDARIES EXPOSED TO PUBLIC VIEW PRIOR TO COMMENCEMENT OF CONSTRUCTION.

GENERAL STREET IMPROVEMENT NOTES

1. CARE SHALL BE TAKEN TO PREVENT GRADED DITCHES AND SWALES FROM UNDERMINING STREET IMPROVEMENTS. UPON INSPECTION, THE CITY ENGINEER MAY REQUIRE TEMPORARY GUNITE SWALES.
2. NO TRENCH BACKFILL SHALL TAKE PLACE PRIOR TO APPROVAL FROM THE CITY INSPECTOR.
3. THE THICKNESS OF BASE MATERIAL SHALL BE DETERMINED BY SOIL TESTS AND RECOMMENDATIONS FROM A SOILS ENGINEER. UPON COMPLETION OF ROUGH GRADE, R-VALUES, SAND EQUIVALENTS, AND STRUCTURAL SECTIONS OF STREETS SHALL BE SUBMITTED TO THE CITY ENGINEER FOR APPROVAL AND THEY MUST HAVE THE MINIMUM SECTION THICKNESS PER CITY STANDARD DRAWING 100. THE BASE COURSE(S) OF AC PAVEMENT SHALL TOTAL AT LEAST 3" THICK. THE FINAL COURSE OF AC PAVEMENT SHALL BE AT LEAST 2" THICK.
4. THE CONTRACTOR SHALL NOT ORDER OR PLACE ANY CONCRETE OR AC PAVING UNTIL THE FORMS AND SUBGRADE OR AGGREGATE BASE HAVE BEEN INSPECTED AND APPROVED BY THE CITY ENGINEER.
5. THE CONTRACTOR SHALL SAWCUT, REMOVE, AND REPLACE, IN KIND, A MINIMUM OF 2 FEET OF EXISTING ASPHALT CONCRETE AND AGGREGATE BASE ADJACENT TO ANY NEW CONSTRUCTED CONCRETE IMPROVEMENTS.
6. THE FINAL OR SURFACE LAYER OF ASPHALT CONCRETE SHALL NOT BE PLACED UNTIL ALL ON-SITE IMPROVEMENTS, INCLUDING GRADING HAVE BEEN COMPLETED AND ALL UNACCEPTABLE WORK HAS BEEN CORRECTED UNLESS OTHERWISE APPROVED BY THE CITY ENGINEER.
7. THE CONTRACTOR SHALL REMOVE AND INSTALL PAVEMENT MARKINGS AND STRIPING AS REQUIRED BY THE CITY ENGINEER. THIS REQUIREMENT SHALL INCLUDE THE PAVEMENT MARKERS DESCRIBED IN THE HYDRANT SPECIFICATIONS.
8. PERMANENT TRAFFIC CONTROL SIGNS AND DEVICES SHALL BE LOCATED AS SPECIFIED BY THE CITY ENGINEER PRIOR TO FINAL APPROVAL OF IMPROVEMENTS.
9. STREET NAME SIGNS AND STOP SIGNS SHALL BE FURNISHED AND INSTALLED BY THE CONTRACTOR IN ACCORDANCE WITH STANDARD DRAWINGS.

GENERAL NPDES NOTES

1. EROSION CONTROL SHALL BE REQUIRED FOR GRADING OPERATIONS YEAR ROUND AND PRIOR TO THE ONSET OF ANY STORM EVENT.
2. IN CASE OF EMERGENCY, CALL:

   _____ (RESPONSIBLE PERSON)

   _____ (FIRM NAME)

   _____ (24 HOUR TELEPHONE)
3. AN UPDATED COPY OF THE EROSION CONTROL PLAN AND SWPPP SHALL BE KEPT AVAILABLE TO THE CITY AT THE PROJECT SITE. THE CONTRACTOR SHALL MAINTAIN ALL NECESSARY RECORDS (I.E. LOGS, INSPECTION REPORTS, ETC.).
4. A STANDBY CREW FOR EMERGENCY WORK SHALL BE AVAILABLE AT ALL TIMES DURING THE RAINY SEASON. NECESSARY MATERIAL SHALL BE AVAILABLE ON SITE AND STOCKPILED AT CONVENIENT LOCATIONS TO FACILITATE RAPID CONSTRUCTION OF TEMPORARY EROSION CONTROL DEVICES OR TO REPAIR ANY DAMAGED EROSION CONTROL MEASURES, ESPECIALLY WHEN RAIN EVENT IS IMMINENT.
5. CONTRACTOR SHALL BE RESPONSIBLE FOR UPDATING THIS PLAN THROUGHOUT CONSTRUCTION AND INDICATE ANY AND ALL REVISIONS/UPDATES ON THIS PLAN.
6. CONTRACTOR SHALL CONDUCT HIS OPERATIONS IN A MANNER THAT STORMWATER WILL BE CONTAINED WITHIN THE PROJECT AREA OR CHANNELED INTO STORM DRAIN SYSTEM PROVIDED THAT DRAINAGE IS FREE OF POLLUTANTS, SEDIMENTS, AND DEBRIS.
7. TEMPORARY EROSION CONTROL SHALL CONSIST OF, BUT NOT LIMITED TO, CONSTRUCTING SUCH FACILITIES AND TAKING SUCH MEASURES AS ARE NECESSARY TO PREVENT, CONTROL AND ABATE WATER, MUD AND EROSION DAMAGE TO PUBLIC AND PRIVATE PROPERTY AS A RESULT OF THE CONSTRUCTION ON THIS PROPERTY.
8. CONTRACTOR/SUB-CONTRACTOR SHALL BE FAMILIAR WITH AND TRAINED IN SEDIMENT AND EROSION CONTROL IN ACCORDANCE WITH THE CALIFORNIA STORMWATER QUALITY ASSOCIATION (CASQA) STORMWATER BEST MANAGEMENT PRACTICE HANDBOOK.
9. CONTRACTOR IS RESPONSIBLE TO INSPECT ALL EROSION CONTROL DEVICES AND BMPS ARE INSTALLED AND FUNCTIONING PROPERLY IF THERE IS A 50% OR GREATER PROBABILITY OF PREDICTED PRECIPITATION. AND AFTER ACTUAL PRECIPITATION. A CONSTRUCTION SITE INSPECTION CHECKLIST AND INSPECTION LOG SHALL BE MAINTAINED AT THE PROJECT SITE AT ALL TIMES AND AVAILABLE FOR REVIEW BY THE BUILDING OFFICIAL (COPIES OF THE SELF-INSPECTION CHECK LIST AND INSPECTION LOGS ARE AVAILABLE IN THE PROJECT SWPPP MANUAL).
10. CONTRACTOR IS RESPONSIBLE TO INSPECT AND ENSURE ALL EROSION CONTROL DEVICES AND BMPS ARE INSTALLED AND FUNCTIONING PROPERLY AS REQUIRED BY THE STATE CONSTRUCTION GENERAL PERMIT. A CONSTRUCTION SITE INSPECTION CHECKLIST AND INSPECTION LOG SHALL BE MAINTAINED AT THE PROJECT SITE AT ALL TIMES AND AVAILABLE FOR REVIEW BY THE BUILDING OFFICIAL.
11. STORM WATER POLLUTION AND EROSION CONTROL DEVICES ARE TO BE MODIFIED, AS NEEDED, AS THE PROJECT PROGRESSES, THE DESIGN AND PLACEMENT OF THESE DEVICES IS THE RESPONSIBILITY OF THE FIELD ENGINEER. PLANS REPRESENTING CHANGES MUST BE SUBMITTED FOR APPROVAL IF REQUESTED BY THE BUILDING OFFICIAL.
12. EVERY EFFORT SHOULD BE MADE TO ELIMINATE THE DISCHARGE OF NON-STORMWATER FROM THE PROJECT SITE AT ALL TIMES.
13. DEVICE SHALL NOT BE MOVED OR MODIFIED WITHOUT THE APPROVAL OF THE CITY INSPECTOR.
14. EROSION CONTROL DEVICES SHOWN ON THIS PLAN MAY BE REMOVED WHEN APPROVED BY THE BUILDING OFFICIAL IF THE GRADING OPERATION HAS PROGRESSED TO THE POINT WHERE THEY ARE NO LONGER REQUIRED.
15. ALL PROTECTIVE DEVICES SHOWN SHALL BE IN PLACE AT THE END OF EACH WORK DAY AS WELL AS THROUGH WEEKENDS AND HOLIDAYS.
16. AVOID CONDUCTING CONSTRUCTION WORK DURING WET WEATHER.
17. THE PERMITTEE AND CONTRACTOR SHALL BE RESPONSIBLE AND TAKE NECESSARY PRECAUTIONS TO PREVENT PUBLIC TRESPASS ONTO AREAS WHERE IMPOUNDED WATER CREATES A HAZARDOUS CONDITION.
18. A GUARD SHALL BE POSTED ON THE SITE WHENEVER THE DEPTH OF WATER IN ANY DEVICE EXCEEDS TWO FEET. THE DEVICE SHALL BE DRAINED OR PUMPED DRY WITHIN 24 HOURS AFTER EACH RAINSTORM. PUMPING AND DRAINING OF ALL BASINS AND DRAINAGE DEVICES MUST COMPLY WITH THE APPROPRIATE BMP FOR DEWATERING OPERATIONS.
19. THE PLACEMENT OF ADDITIONAL DEVICES TO REDUCE EROSION DAMAGE AND CONTAIN POLLUTANTS WITHIN THE SITE IS LEFT TO THE DISCRETION OF THE FIELD ENGINEER. ADDITIONAL DEVICES AS NEEDED SHALL BE INSTALLED TO RETAIN SEDIMENTS AND OTHER POLLUTANTS ON SITE.
20. DESILTING BASINS MAY NOT BE REMOVED OR MADE INOPERABLE BETWEEN NOVEMBER 1 AND APRIL 15 OF THE FOLLOWING YEAR WITH OUT THE APPROVAL OF THE BUILDING OFFICIAL.
21. ERODED SEDIMENTS AND OTHER POLLUTANTS MUST BE RETAINED ON-SITE AND MAY NOT BE TRANSPORTED FROM THE SITE VIA SHEET FLOW, SWALES, AREA DRAINS, NATURAL DRAINAGE COURSES OR WIND.
22. ANY GRADED SLOPE SURFACE PROTECTION MEASURE DAMAGED DURING A RAIN STORM SHALL BE REPAIRED IMMEDIATELY.
23. ALL CUT AND FILL SLOPES GREATER THAN 1 VERTICAL TO 3 HORIZONTAL SHALL BE COVERED WITH 10 MIL PLASTIC SHEETING HELD IN PLACE WITH SANDBAGS (UNLESS PLANTED OR HYDROMULCHED).
24. FILL SLOPES AT CONSTRUCTION SITE PERIMETER MUST DRAIN AWAY FROM THE TOP OF SLOPES AT THE END OF EACH WORK DAY.
25. CLEARING AND GRUBBING SHOULD BE LIMITED TO AREAS THAT WILL RECEIVE IMMEDIATE GRADING. EROSION CONTROL MEASURES SHALL BE IMPLEMENTED TO PROTECT AREAS WHICH HAVE BEEN CLEARED AND GRUBBED. THESE MEASURES MAY INCLUDE BE SHALL NOT BE LIMITED TO; GRADED DITCHES, SAND OR GRAVEL BAGS, BARRIERS AND SILT FENCING. CARE SHALL BE EXERCISED TO PRESERVE VEGETATION BEYOND LIMITS OF GRADING AND PREVENT SEDIMENT DISCHARGE WHILE CONSTRUCTION IS IN PROGRESS IN THE AREA.
26. SEDIMENT CONTROL SHALL BE USED AT THE TOE OF ANY ERODIBLE SLOPE.
27. FACES OF FINISHED CUT AND FILL SLOPES SHALL BE PREPARED AND MAINTAINED TO CONTROL AGAINST EROSION. THERE PERMANENT EROSION CONTROL MEASURES MAY CONSIST OF ADEQUATE SEEDING, PLANTING, AND JUTE MATTING. THE PROTECTION FOR THE SLOPES SHALL BE INSTALLED AS SOON AS PRACTICABLE AND PRIOR TO CALLING FOR FINAL APPROVAL.
28. GRADED AREAS ADJACENT TO FILL SLOPES LOCATED AT THE SITE PERIMETER MUST DRAIN AWAY FROM THE TOP OF SLOPE AT THE CONCLUSION OF EACH WORKING DAY. ALL LOOSE SOILS AND DEBRIS THAT MAY CREATE A POTENTIAL HAZARD TO OFF-SITE PROPERTY SHALL BE STABILIZED OR REMOVED FROM THE SITE ON A DAILY BASIS.
29. ALL SILT AND DEBRIS SHALL BE REMOVED FROM CHECK BERMS, DESILTING BASINS, AND OTHER EROSION CONTROL DEVICES WITHIN 24 HOURS AFTER EACH RAINSTORM AND BE DISPOSED OF PROPERLY.
30. STOCKPILES OF EARTH AND OTHER CONSTRUCTION RELATED MATERIALS MUST BE PROTECTED FROM BEING TRANSPORTED FROM THE SITE BY THE FORCES OF WIND OR WATER.
31. SEDIMENTS AND OTHER MATERIALS MAY NOT BE TRACKED FROM THE SITE BY VEHICLE TRAFFIC. THE CONSTRUCTION ENTRANCE ROADWAYS MUST BE STABILIZED SO AS TO INHIBIT SEDIMENTS FROM BEING DEPOSITED INTO THE PUBLIC WAY. ACCIDENTAL DEPOSITIONS MUST BE SWEPT UP IMMEDIATELY AND MAY NOT BE WASHED DOWN BY RAIN OR OTHER MEANS.
32. ANY SLOPES WITH DISTURBED SOILS OR DENUDED OF VEGETATION MUST BE STABILIZED SO AS TO INHIBIT EROSION BY WIND AND WATER.
33. CONTRACTOR SHALL IMMEDIATELY RESTORE ANY DAMAGED EROSION CONTROL MEASURE IN THE AREA DISTURBED BY CONSTRUCTION ACTIVITIES.
34. PROTECT ALL STORM DRAINAGE STRUCTURES FROM SEDIMENT CLOGGING BY PROVIDING INLET PROTECTION AT ALL OPENINGS.
35. TEMPORARY SANITATION FACILITIES SHALL BE MAINTAINED IN GOOD WORKING ORDER BY A LICENSED MAINTENANCE SERVICE PROVIDER.
36. STORE CONSTRUCTION RELATED MATERIALS AWAY FROM DRAINAGE COURSES TO PREVENT CONTACT WITH STORMWATER.
37. ALLOW CONSTRUCTION RELATED MATERIAL DELIVERY AND STORAGE ONLY IN DESIGNATED AREAS AND AVOID TRANSPORT NEAR DRAINAGE PATHS AND WATERWAYS.
38. PLACE DRIP PANS UNDER CONSTRUCTION EQUIPMENT WHEN NOT IN USE.
39. CLEAN UP LEAKS AND SPILLS IMMEDIATELY USING ABSORBENT MATERIALS AND DISPOSE OF PROPERLY.
40. COLLECT AND REMOVE ALL BROKEN ASPHALT FROM THE SITE. REMOVED ASPHALT MUST BE DISPOSED OF PROPERLY.
41. KEEP WORK SITE CLEAN AND ORDERLY ON DAILY BASIS.
42. MINIMIZE THE USE OF HAZARDOUS MATERIAL ON SITE.
43. FUELS, OILS, SOLVENTS, AND OTHER TOXIC MATERIALS MUST BE STORED IN ACCORDANCE WITH THEIR LISTING AND ARE NOT TO CONTAMINATE THE SOIL AND SURFACE WATERS. ALL APPROVED STORAGE CONTAINERS ARE TO BE PROTECTED FROM THE WEATHER. SPILLS MUST BE CLEANED UP IMMEDIATELY AND DISPOSED OF IN A PROPER MANNER. SPILLS MAY NOT BE WASHED INTO THE DRAINAGE SYSTEM.
44. EXCESS OR WASTE CONCRETE MAY NOT BE WASHED INTO THE PUBLIC WAY OR ANY OTHER DRAINAGE SYSTEM. PROVISIONS SHALL BE MADE TO RETAIN CONCRETE WASTES ON-SITE UNTIL THEY CAN BE DISPOSED OF AS SOLID WASTE.
45. PERFORM WASHOUT OF CONCRETE TRUCKS IN DESIGNATED AREAS ONLY. WASHOUT AREAS SHALL BE LOCATED AWAY FROM STORM DRAINS, OPEN DITCHES, STREETS, OR ANY DRAINAGE COURSE.
46. TRASH AND CONSTRUCTION RELATED SOLID WASTES MUST BE DEPOSITED INTO A COVERED RECEPTACLE TO PREVENT CONTAMINATION OF RAINWATER AND DISPERSAL BY WIND.
47. USE WATERTIGHT DUMPSTERS FOR TRASH AND CONSTRUCTION WASTE.
48. COLLECT SITE TRASH AS NEEDED, ESPECIALLY DURING RAINY OR WINDY CONDITIONS. ARRANGE FOR REGULAR WASTE COLLECTION BEFORE CONTAINERS OVERFLOW.
49. PAINT BRUSHES OR CONTAINERS ARE TO BE CLEANED OUT ONLY AT THE DESIGNATED AREA, WHICH PROVIDES FOR FULL CONTAINMENT OF PAINT LADEN LIQUID AND RESIDUE FOR PROPER DISPOSAL.
50. THE FOLLOWING BMPS FROM THE "CASQA CONSTRUCTION BMP ONLINE HANDBOOK" MUST BE IMPLEMENTED FOR ALL CONSTRUCTION ACTIVITIES AS APPLICABLE. AS AN ALTERNATE, DETAILS FROM "CALTRANS STORMWATER QUALITY HANDBOOKS, CONSTRUCTION SITE BEST MANAGEMENT PRACTICES (BMP) MANUAL" MAY BE USED. ADDITIONAL MEASURES MAY BE REQUIRED IF DEEMED APPROPRIATE BY THE BUILDING OFFICIAL.

EROSION CONTROL

EC1 – SCHEDULING
EC2 – PRESERVATION OF EXISTING VEGETATION
EC3 – HYDRAULIC MULCH
EC4 – HYDROSEEDING
EC5 – SOIL BINDERS
EC6 – STRAW MULCH
EC7 – GEOTEXTILES & MATS
EC8 – WOOD MULCHING
EC9 – EARTH DIKES AND DRAINAGE SWALES
EC10 – VELOCITY DISSIPATION DEVICES
EC11 – SLOPE DRAINS
EC13 – RESERVED
EC14 – COMPOST BLANKETS
EC15 – SOIL PREPARATION\ROUGHENING
EC16 – NON-VEGETATED STABILIZATION

TEMPORARY SEDIMENT CONTROL

SE1 – SILT FENCE
SE2 – SEDIMENT BASIN
SE3 – SEDIMENT TRAP
SE4 – CHECK DAM
SE5 – FIBER ROLLS
SE6 – GRAVEL BAG BERM
SE7 – STREET SWEEPING AND VACUUMING
SE8 – SANDBAG BARRIER
SE9 – STRAW BALE BARRIER
SE10 – STORM DRAIN INLET PROTECTION
SE12 – TEMPORARY SILT DIKE
SE13 – COMPOST SOCKS & BERMS
SE14 – BIOFILTER BAGS

WIND EROSION CONTROL

WE1 – WIND EROSION CONTROL

EQUIPMENT TRACKING CONTROL

TC1 – STABILIZED CONSTRUCTION ENTRANCE EXIT
TC2 – STABILIZED CONSTRUCTION ROADWAY
TC3 – ENTRANCE/OUTLET TIRE WASH

NON-STORMWATER MANAGEMENT

NS1 – WATER CONSERVATION PRACTICES
NS2 – DEWATERING OPERATIONS
NS3 – PAVING AND GRINDING OPERATIONS
NS5 – CLEAR WATER DIVERSION
NS6 – ILLICIT CONNECTION/DISCHARGE
NS7 – POTABLE WATER/IRRIGATION
NS8 – VEHICLE AND EQUIPMENT CLEANING
NS9 – VEHICLE AND EQUIPMENT FUELING
NS10 – VEHICLE AND EQUIPMENT MAINTENANCE
NS11 – PILE DRIVING OPERATIONS
NS12 – CONCRETE CURING
NS13 – CONCRETE FINISHING
NS14 – MATERIAL AND EQUIPMENT USE

WASTE MANAGEMENT & MATERIAL POLLUTION CONTROL

WM1 – MATERIAL DELIVERY AND STORAGE
WM2 – MATERIAL USE
WM3 – STOCKPILE MANAGEMENT
WM4 – SPILL PREVENTION AND CONTROL
WM5 – SOLID WASTE MANAGEMENT
WM6 – HAZARDOUS WASTE MANAGEMENT
WM7 – CONTAMINATION SOIL MANAGEMENT
WM8 – CONCRETE WASTE MANAGEMENT
WM9 – SANITARY/SEPTIC WASTE MANAGEMENT
WM10 – LIQUID WASTE MANAGEMENT

CONSTRUCTION NOTES

		QTY	
1	CONSTRUCT 6" THICK PCC PAVEMENT (560-A-3500) OVER COMPACTED NATIVE (COLOR, FINISH, AND SCORING PER LANDSCAPE ARCHITECT'S PLANS)	52,600	SF
2	CONSTRUCT PLAY SURFACE PER LANDSCAPE ARCHITECT'S PLANS AND DETAILS	– –	
3	CONSTRUCT 0" CURB PER LANDSCAPE ARCHITECT'S PLANS AND DETAILS	– –	
4	INSTALL STABILIZED DG SURFACE PER LANDSCAPE ARCHITECT'S PLANS AND DETAILS	– –	
20	SAWCUT FULL THICKNESS EXISTING AC/PCC PAVEMENT, JOIN EXISTING AC PER DETAIL D/C3.01	100	LF
21	CONSTRUCT CURB AND GUTTER PER RIVERSIDE COUNTY STD 201, MATCH EXISTING GUTTER WIDTH	20	LF
22	CONSTRUCT LOCAL DEPRESSION PER RCFCWCD STD LD201, CASE C	2	EA
23	CONSTRUCT CURB OPENING CATCH BASIN No. 1 PER RCFCWCD STD CB100 W/ ADS STORMFLEX PC CATCH BASIN INLET FILTER AND ALMETEK INDUSTRIES STAINLESS STEEL STORM DRAIN MARKER (PART #SDM-SS, COLOR BLUE, CENTER HOLE, "NO DUMPING ONLY RAIN IN THE DRAIN") W/ RIVET INSTALLATION ADAPTOR (PART #DR250), W=7', V PER PLAN	2	EA
24	INSTALL 18" ADS N-12WT IB HDPE STORM DRAIN PIPE W/ WARNING TAPE AND TRACER WIRE PER DETAIL A/C3.01	50	LF
25	INSTALL 36" ADS N-12WT IB HDPE STORM DRAIN PIPE W/ WARNING TAPE AND TRACER WIRE PER DETAIL A/C3.01	870	LF
26	INSTALL 36" ADS NYLOPLAST MANHOLE PER DETAIL C/C3.01, MANHOLE 1	1	EA
27	INSTALL 36" ADS NYLOPLAST MANHOLE PER DETAIL C/C3.01, MANHOLE 2	1	EA
28	INSTALL 36" ADS NYLOPLAST MANHOLE PER DETAIL C/C3.01, MANHOLE 3	1	EA
29	INSTALL 36" ADS NYLOPLAST MANHOLE PER DETAIL C/C3.01, MANHOLE 4	1	EA
30	CONSTRUCT STORM DRAIN MANHOLE No. 1 PER RCFCWCD STD MH251 AND PER DETAIL B/C3.01	1	EA

MATERIAL QUANTITIES ARE FOR PLAN CHECKING PURPOSES ONLY. CONTRACTOR TO PERFORM THEIR OWN TAKE-OFFS FOR CONSTRUCTION. ENGINEER MAKES NO WARRANTIES TO THE ACCURACY OF SAID QUANTITIES.

RISK LEVEL 1, WDID/App ID _____

DIGALERT — DIAL BEFORE YOU DIG — TWO WORKING DAYS BEFORE YOU DIG — TOLL FREE 811 — A PUBLIC SERVICE BY UNDERGROUND SERVICE ALERT

MARK	BY	DATE	REVISIONS	APPR	DATE
ENGINEER				MJPA	

BENCHMARK
POINT 100
SCRIBED "X" FLUSH ON CONCRETE SLAB APPROXIMATELY 83.5' EAST AND 16.3' SOUTH OF THE SOUTHEAST CORNER OF THE RESTROOM BUILDING, ESTABLISHED AS TEMPORARY BENCH.
ELEVATION: 1327.418

BASIS OF BEARINGS
THE BEARINGS SHOWN HEREON ARE BASED UPON THE THE BEARING OF N00°12'16"W ALONG THE CENTER LINE OF FOLSOM STREET BETWEEN TAHOE STREET AND CLEAR LAKE STREET AS ESTABLISHED PER TRACT No. 22248 IN MB 214/016-020, IN THE CITY OF PERRIS, COUNTY OF RIVERSIDE, STATE OF CALIFORNIA.

APPROVED BY — DATE 08-03-2023
CITY ENGINEER
RCE No.: _____

PREPARED BY — DATE 07/26/2023
DAVID MICHAEL BECKWITH
RCE No.: C73761

ENGINEER'S SEAL — REGISTERED PROFESSIONAL ENGINEER — DAVID MICHAEL BECKWITH — No. 73761 Exp. 06/30/25 — CIVIL — STATE OF CALIFORNIA

PREPARED BY
DAVID BECKWITH AND ASSOCIATES INC
Civil & Structural Engineering - Land Surveying - QSD/QSP Environmental Services
9431 Haven Avenue, Suite 232
Rancho Cucamonga, CA 91730
(T) 714.349.7007 (F) 714.948.4471
www.davidbeckwithandassociates.com

CITY OF PERRIS
COPPER CREEK PARK
PARK IMPROVEMENT PLANS
PRECISE GRADING PLAN
GENERAL NOTES

FOR CITY OF PERRIS — W.O.

SHEET No. C0.02
2 OF 09 SHEETS
FILE No. PA-1378

D:\OneDrive - Dbainc\Projects\2022\2022-19_Copper Creek Park\Grading\PGP\202219pgp02gn.dwg - LAST PLOTTED ON Wed 07/26/23 - 03:30PM BY DBAinc

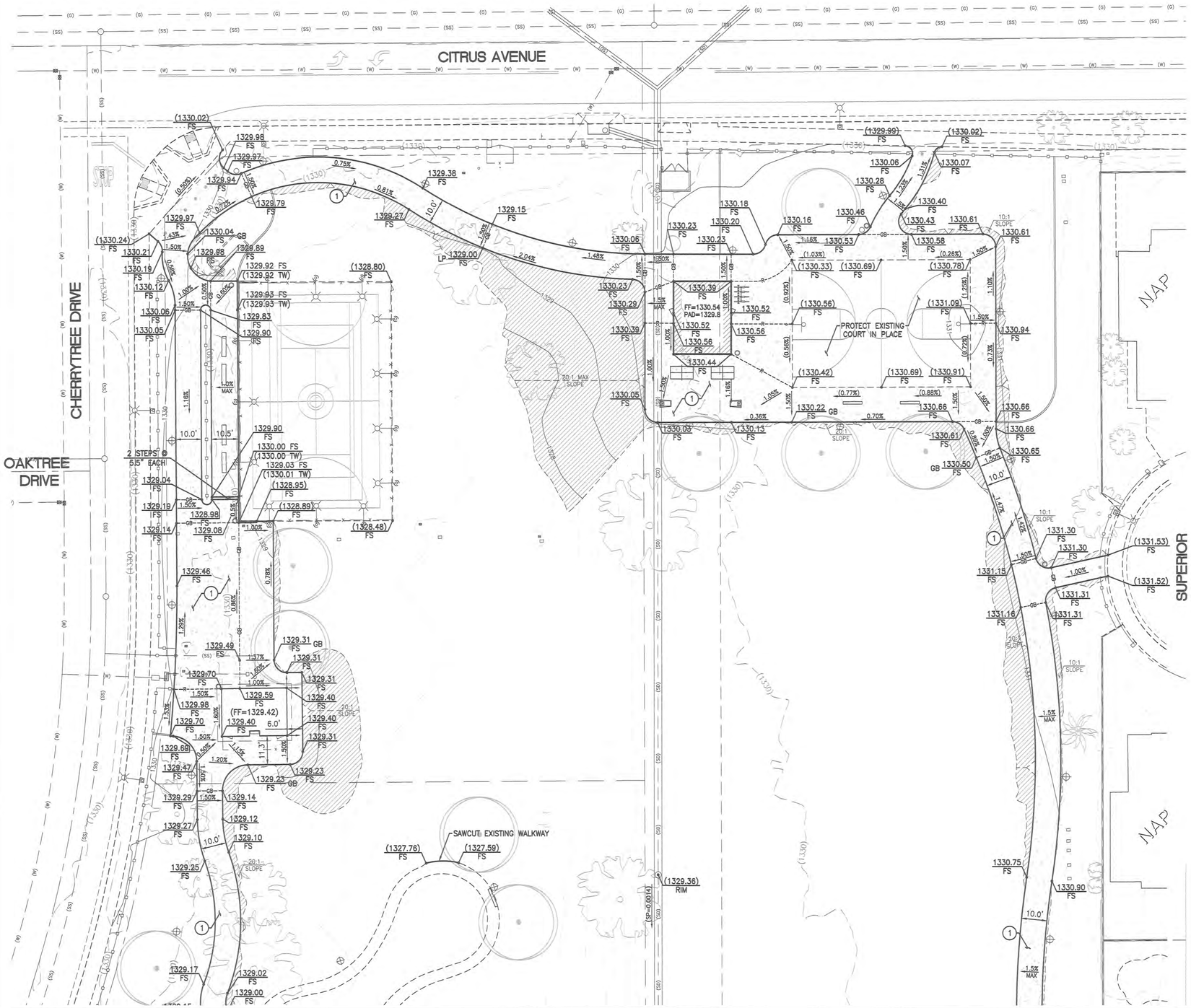

LEGEND

(COMM)	EXISTING COMMUNICATIONS LINE	FF	FINISHED FLOOR		PROPOSED AC PAVEMENT
(IRR)	EXISTING IRRIGATION	FG	FINISHED GROUND		PROPOSED PCC PAVEMENT
(E)	EXISTING ELECTRICAL	FL	FLOWLINE		PROPOSED DG SURFACE
(G)	EXISTING GAS	FS	FINISHED SURFACE		
(SS)	EXISTING SANITARY SEWER	GB	GRADE BREAK		
(SD)	EXISTING STORM DRAIN	HP	HIGH POINT		
(SL)	EXISTING STREET LIGHT POWER LINE	INV	INVERT	SPPWC	STANDARD PLANS FOR PUBLIC WORKS CONSTRUCTION
(W)	EXISTING WATER	LP	LOW POINT		
(?)	EXISTING UNKNOWN UTILITY	NAP	NOT A PART		
x	EXISTING CHAIN LINK FENCE	PIP	PROTECT IN PLACE		
	EXISTING FLOWLINE	R	RIDGE	SSPWC	STANDARD SPECIFICATIONS FOR PUBLIC WORKS CONSTRUCTION
	EXISTING TOP/TOE OF SLOPE	RIM	TOP OF CLEANOUT		
(1020)	EXISTING MAJOR CONTOUR	TC	TOP OF CURB		
	EXISTING MINOR CONTOUR	TG	TOP OF GRATE		
	SAWCUT EXISTING PAVEMENT	TW	TOP OF WALL	RCFCWCD	RIVERSIDE COUNTY FLOOD CONTROL & WATER CONSERVATION DISTRICT

CONSTRUCTION NOTES

1. CONSTRUCT 6" THICK PCC PAVEMENT (560-A-3500) OVER COMPACTED NATIVE (COLOR, FINISH, AND SCORING PER LANDSCAPE ARCHITECT'S PLANS)
2. CONSTRUCT PLAY SURFACE PER LANDSCAPE ARCHITECT'S PLANS AND DETAILS
3. CONSTRUCT 0" CURB PER LANDSCAPE ARCHITECT'S PLANS AND DETAILS
4. INSTALL STABILIZED DG SURFACE PER LANDSCAPE ARCHITECT'S PLANS AND DETAILS

NOTICE TO CONTRACTOR

ALL PAVEMENT JOINTS TO BE 1/4" MAX IN WIDTH, ALL JOINTS OVER 1/4" WILL BE REJECTED AND WORK WILL NEED TO BE REDONE

GRAPHIC SCALE

20 0 10 20 40 60

(IN FEET)
1 inch = 20 ft.

RISK LEVEL 1, WDID/App ID _____

DIGALERT
DIAL BEFORE YOU DIG — TWO WORKING DAYS BEFORE YOU DIG
TOLL FREE 811
A PUBLIC SERVICE BY UNDERGROUND SERVICE ALERT

MARK	BY	DATE	REVISIONS	APPR	DATE
ENGINEER				MJPA	

BENCHMARK

POINT 100

SCRIBED "X" FLUSH ON CONCRETE SLAB APPROXIMATELY 83.5' EAST AND 16.3' SOUTH OF THE SOUTHEAST CORNER OF THE RESTROOM BUILDING, ESTABLISHED AS TEMPORARY BENCH.

ELEVATION: 1327.418

BASIS OF BEARINGS

THE BEARINGS SHOWN HEREON ARE BASED UPON THE THE BEARING OF N00°12'16"W ALONG THE CENTER LINE OF FOLSOM STREET BETWEEN TAHOE STREET AND CLEAR LAKE STREET AS ESTABLISHED PER TRACT No. 22248 IN MB 214/016-020, IN THE CITY OF PERRIS, COUNTY OF RIVERSIDE, STATE OF CALIFORNIA.

APPROVED BY _____ DATE 08-02-2023
CONTRACT CITY ENGINEER
RCE No.: _____

PREPARED BY _____ DATE 07/26/2023
DAVID MICHAEL BECKWITH
RCE No.: C73761

ENGINEER'S SEAL
REGISTERED PROFESSIONAL ENGINEER — DAVID MICHAEL BECKWITH — No. 73761 Exp. 06/30/25 — CIVIL — STATE OF CALIFORNIA

PREPARED BY
DAVID BECKWITH AND ASSOCIATES INC
Civil & Structural Engineering - Land Surveying - QSD/QSP Environmental Services
9431 Haven Avenue, Suite 232
Rancho Cucamonga, CA 91730
(T) 714.349.7007 (F) 714.948.4471
www.davidbeckwithandassociates.com

CITY OF PERRIS

COPPER CREEK PARK
PARK IMPROVEMENT PLANS

PRECISE GRADING PLAN
PRECISE GRADING

FOR CITY OF PERRIS | W.O.

SHEET No. C1.01
3 OF 09 SHEETS
FILE No. PA-1378

D:\OneDrive - Dbainc\Projects\2022\2022-18_Copper Creek Park\Grading\PGP\202219pgp03pg.dwg - LAST PLOTTED ON Wed 07/26/23 - 03:31PM BY DBAinc

MATCHLINE - SEE SHEET C1.01

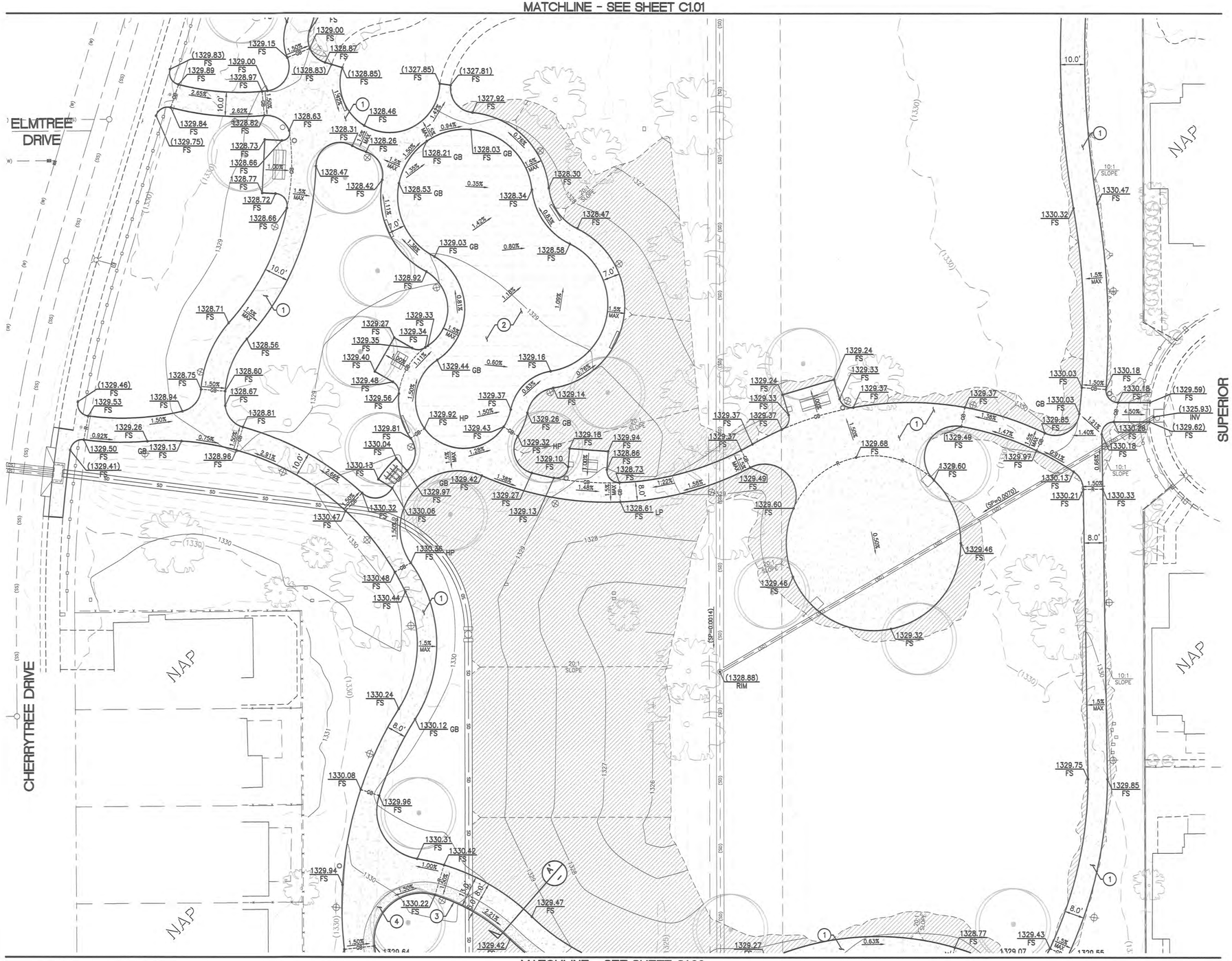

MATCHLINE - SEE SHEET C1.03

LEGEND

(COMM)	EXISTING COMMUNICATIONS LINE	FF	FINISHED FLOOR
(IRR)	EXISTING IRRIGATION	FG	FINISHED GROUND
(E)	EXISTING ELECTRICAL	FL	FLOWLINE
(G)	EXISTING GAS	FS	FINISHED SURFACE
(SS)	EXISTING SANITARY SEWER	GB	GRADE BREAK
(SD)	EXISTING STORM DRAIN	HP	HIGH POINT
(SL)	EXISTING STREET LIGHT POWER LINE	INV	INVERT
(W)	EXISTING WATER	LP	LOW POINT
(?)	EXISTING UNKNOWN UTILITY	NAP	NOT A PART
x	EXISTING CHAIN LINK FENCE	PIP	PROTECT IN PLACE
	EXISTING FLOWLINE	R	RIDGE
	EXISTING TOP/TOE OF SLOPE	RIM	TOP OF CLEANOUT
(1020)	EXISTING MAJOR CONTOUR	TC	TOP OF CURB
	EXISTING MINOR CONTOUR	TG	TOP OF GRATE
	SAWCUT EXISTING PAVEMENT	TW	TOP OF WALL
	PROPOSED AC PAVEMENT	SPPWC	STANDARD PLANS FOR PUBLIC WORKS CONSTRUCTION
	PROPOSED PCC PAVEMENT		
	PROPOSED DG SURFACE	SSPWC	STANDARD SPECIFICATIONS FOR PUBLIC WORKS CONSTRUCTION
		RCFCWCD	RIVERSIDE COUNTY FLOOD CONTROL & WATER CONSERVATION DISTRICT

CONSTRUCTION NOTES

1. CONSTRUCT 6" THICK PCC PAVEMENT (560-A-3500) OVER COMPACTED NATIVE (COLOR, FINISH, AND SCORING PER LANDSCAPE ARCHITECT'S PLANS)
2. CONSTRUCT PLAY SURFACE PER LANDSCAPE ARCHITECT'S PLANS AND DETAILS
3. CONSTRUCT 0" CURB PER LANDSCAPE ARCHITECT'S PLANS AND DETAILS
4. INSTALL STABILIZED DG SURFACE PER LANDSCAPE ARCHITECT'S PLANS AND DETAILS

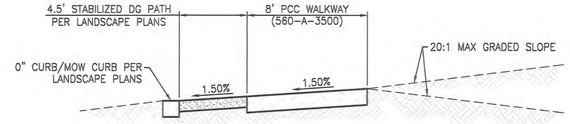

TYPICAL SECTION
NOT TO SCALE
A'

NOTICE TO CONTRACTOR

ALL PAVEMENT JOINTS TO BE 1/4" MAX IN WIDTH, ALL JOINTS OVER 1/4" WILL BE REJECTED AND WORK WILL NEED TO BE REDONE

GRAPHIC SCALE
20 0 10 20 40 60
(IN FEET)
1 inch = 20 ft.

RISK LEVEL 1, WDID/App ID _____

DIGALERT
DIAL BEFORE YOU DIG
TWO WORKING DAYS BEFORE YOU DIG
TOLL FREE 811
A PUBLIC SERVICE BY UNDERGROUND SERVICE ALERT

MARK	BY	DATE	REVISIONS	APPR	DATE
				MJPA	

ENGINEER

BENCHMARK

POINT 100

SCRIBED "X" FLUSH ON CONCRETE SLAB APPROXIMATELY 83.5' EAST AND 16.3' SOUTH OF THE SOUTHEAST CORNER OF THE RESTROOM BUILDING, ESTABLISHED AS TEMPORARY BENCH.

ELEVATION: 1327.418

BASIS OF BEARINGS

THE BEARINGS SHOWN HEREON ARE BASED UPON THE THE BEARING OF N00°12'16"W ALONG THE CENTER LINE OF FOLSOM STREET BETWEEN TAHOE STREET AND CLEAR LAKE STREET AS ESTABLISHED PER TRACT No. 22248 IN MB 214/016-020, IN THE CITY OF PERRIS, COUNTY OF RIVERSIDE, STATE OF CALIFORNIA.

APPROVED BY _____ DATE 08.08.2023
CONTRACT CITY ENGINEER
RCE No.:

PREPARED BY _____ DATE 07/26/2023
DAVID MICHAEL BECKWITH
RCE No.: C73761

ENGINEER'S SEAL
REGISTERED PROFESSIONAL ENGINEER DAVID MICHAEL BECKWITH No. 73761 Exp. 06/30/25 CIVIL STATE OF CALIFORNIA

PREPARED BY
DAVID BECKWITH AND ASSOCIATES INC
Civil & Structural Engineering - Land Surveying - QSD/QSP Environmental Services
9431 Haven Avenue, Suite 232
Rancho Cucamonga, CA 91730
(T) 714.349.7007 (F) 714.948.4471
www.davidbeckwithandassociates.com

CITY OF PERRIS
COPPER CREEK PARK
PARK IMPROVEMENT PLANS
PRECISE GRADING PLAN
PRECISE GRADING

FOR CITY OF PERRIS W.O.

SHEET No. C1.02
4 OF 09 SHEETS
FILE No. PA-1378

D:\OneDrive - Dbainc\Projects\2022\2022-19_Copper Creek Park\Grading\PGP\2022190pg04pg.dwg - LAST PLOTTED ON Wed 07/26/23 - 03:43PM BY DBAinc

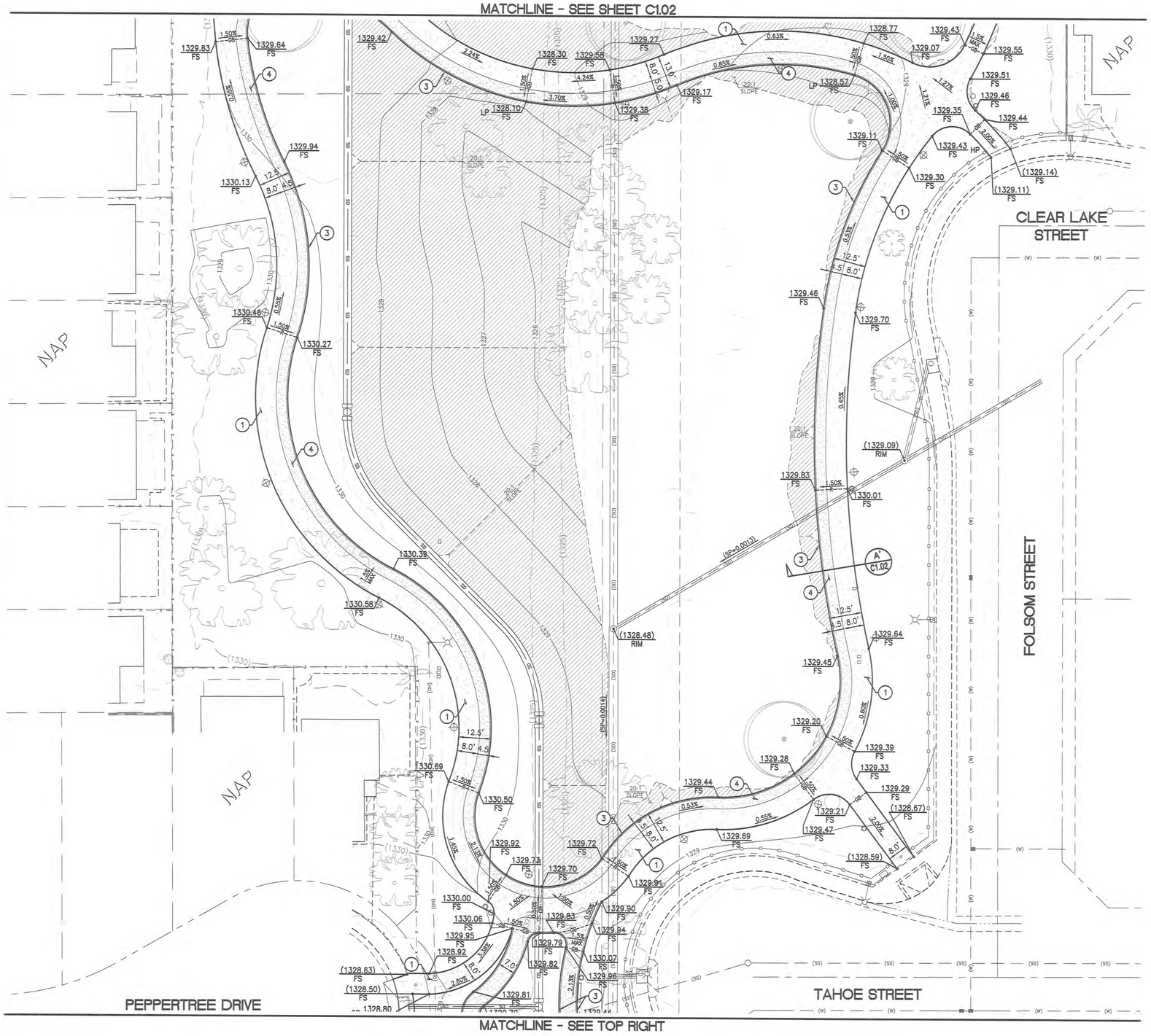

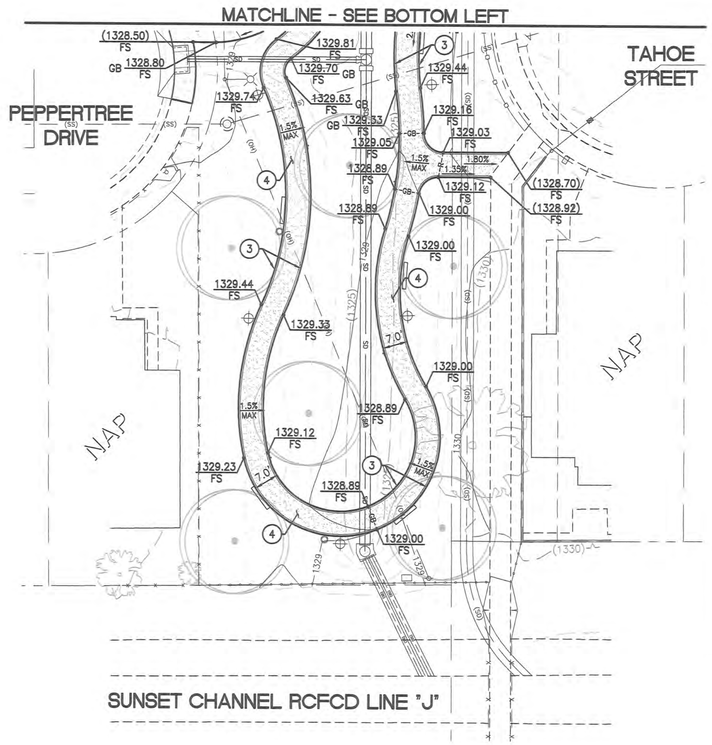

LEGEND

(COMM)	EXISTING COMMUNICATIONS LINE	FF	FINISHED FLOOR		PROPOSED AC PAVEMENT
(IRR)	EXISTING IRRIGATION	FG	FINISHED GROUND		PROPOSED PCC PAVEMENT
(E)	EXISTING ELECTRICAL	FL	FLOWLINE		PROPOSED DG SURFACE
(G)	EXISTING GAS	FS	FINISHED SURFACE		
(SS)	EXISTING SANITARY SEWER	GB	GRADE BREAK	SPPWC	STANDARD PLANS FOR PUBLIC WORKS CONSTRUCTION
(SD)	EXISTING STORM DRAIN	HP	HIGH POINT		
(SL)	EXISTING STREET LIGHT POWER LINE	INV	INVERT	SSPWC	STANDARD SPECIFICATIONS FOR PUBLIC WORKS CONSTRUCTION
(W)	EXISTING WATER	LP	LOW POINT		
(?)	EXISTING UNKNOWN UTILITY	NAP	NOT A PART	RCFCWCD	RIVERSIDE COUNTY FLOOD CONTROL & WATER CONSERVATION DISTRICT
x x	EXISTING CHAIN LINK FENCE	PIP	PROTECT IN PLACE		
	EXISTING FLOWLINE	R	RIDGE		
	EXISTING TOP/TOE OF SLOPE	RIM	TOP OF CLEANOUT		
(1020)	EXISTING MAJOR CONTOUR	TC	TOP OF CURB		
	EXISTING MINOR CONTOUR	TG	TOP OF GRATE		
	SAWCUT EXISTING PAVEMENT	TW	TOP OF WALL		

CONSTRUCTION NOTES

1. CONSTRUCT 6" THICK PCC PAVEMENT (560-A-3500) OVER COMPACTED NATIVE (COLOR, FINISH, AND SCORING PER LANDSCAPE ARCHITECT'S PLANS)
2. CONSTRUCT PLAY SURFACE PER LANDSCAPE ARCHITECT'S PLANS AND DETAILS
3. CONSTRUCT 0" CURB PER LANDSCAPE ARCHITECT'S PLANS AND DETAILS
4. INSTALL STABILIZED DG SURFACE PER LANDSCAPE ARCHITECT'S PLANS AND DETAILS

NOTICE TO CONTRACTOR

ALL PAVEMENT JOINTS TO BE 1/4" MAX IN WIDTH, ALL JOINTS OVER 1/4" WILL BE REJECTED AND WORK WILL NEED TO BE REDONE

GRAPHIC SCALE

20 0 10 20 40 60

(IN FEET)
1 inch = 20 ft.

RISK LEVEL 1, WDID/App ID ____

DIGALERT
DIAL BEFORE YOU DIG — TWO WORKING DAYS BEFORE YOU DIG
TOLL FREE 811
A PUBLIC SERVICE BY UNDERGROUND SERVICE ALERT

MARK	BY	DATE	REVISIONS	APPR	DATE
				MJPA	

ENGINEER

BENCHMARK

POINT 100

SCRIBED "X" FLUSH ON CONCRETE SLAB APPROXIMATELY 83.5' EAST AND 16.3' SOUTH OF THE SOUTHEAST CORNER OF THE RESTROOM BUILDING, ESTABLISHED AS TEMPORARY BENCH.

ELEVATION: 1327.418

BASIS OF BEARINGS

THE BEARINGS SHOWN HEREON ARE BASED UPON THE THE BEARING OF N00°12'16"W ALONG THE CENTER LINE OF FOLSOM STREET BETWEEN TAHOE STREET AND CLEAR LAKE STREET AS ESTABLISHED PER TRACT No. 22248 IN MB 214/016-020, IN THE CITY OF PERRIS, COUNTY OF RIVERSIDE, STATE OF CALIFORNIA.

APPROVED BY — DATE 08.03.2023
CITY ENGINEER
RCE No.: ____

PREPARED BY — DATE 07/26/2023
DAVID MICHAEL BECKWITH
RCE No.: C73761

ENGINEER'S SEAL
REGISTERED PROFESSIONAL ENGINEER — DAVID MICHAEL BECKWITH — No. 73761 Exp. 06/30/25 — CIVIL — STATE OF CALIFORNIA

PREPARED BY
DAVID BECKWITH AND ASSOCIATES INC
Civil & Structural Engineering - Land Surveying - QSD/QSP Environmental Services
9431 Haven Avenue, Suite 232
Rancho Cucamonga, CA 91730
(T) 714.349.7007 (F) 714.948.4471
www.davidbeckwithandassociates.com

CITY OF PERRIS
COPPER CREEK PARK
PARK IMPROVEMENT PLANS
PRECISE GRADING PLAN
PRECISE GRADING

FOR CITY OF PERRIS — W.O.

SHEET No. C1.03
5 OF 09 SHEETS
FILE No. PA-1378

D:\Onedrive - Dbdinc\Projects\2022\2022-19_Copper Creek Park\Grading\PGP\202219pgp05pg.dwg - LAST PLOTTED ON Wed 07/26/23 - 03:33PM BY DBAinc

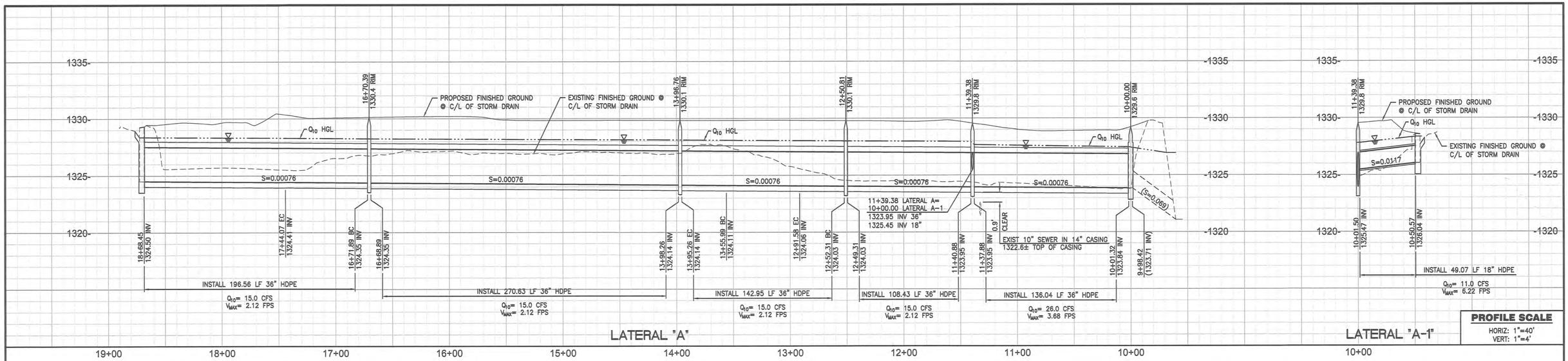

PROFILE SCALE
HORIZ: 1"=40'
VERT: 1"=4'

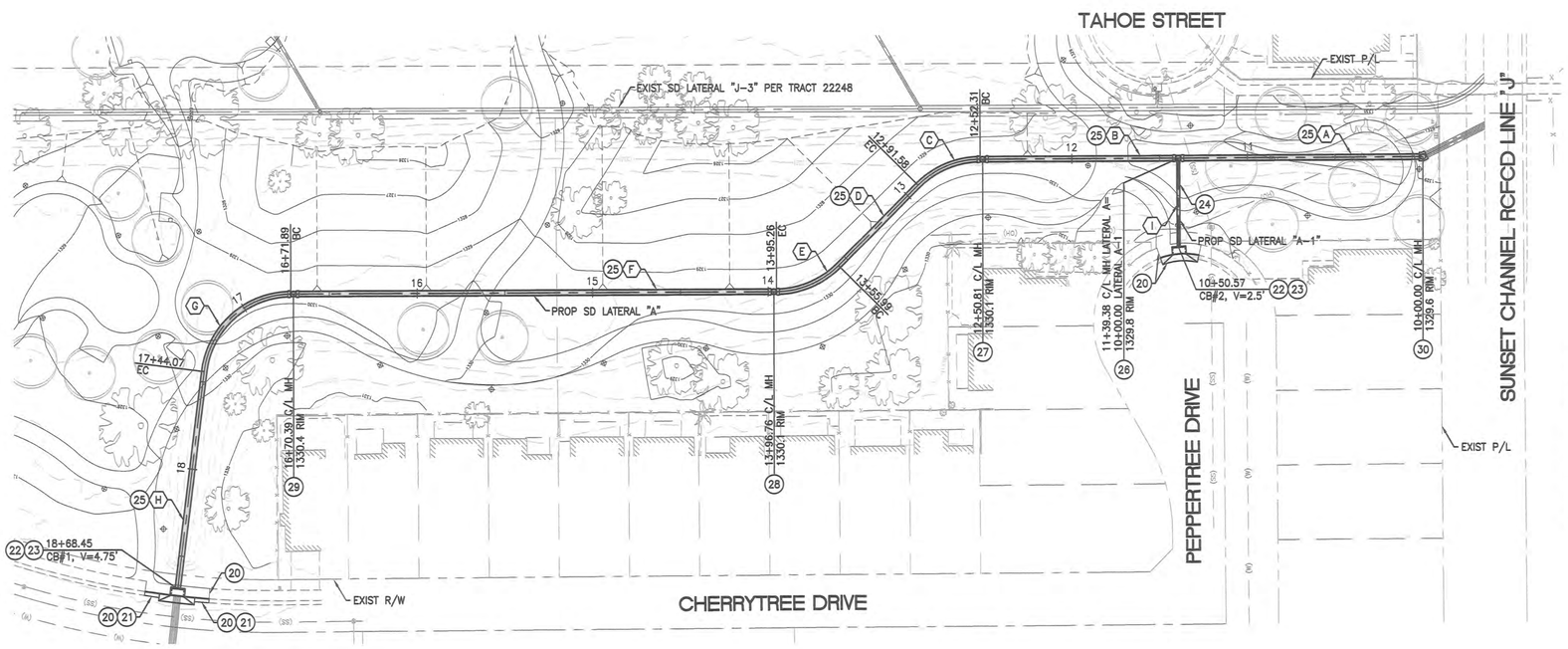

STORM DRAIN CONSTRUCTION NOTES

20. SAWCUT FULL THICKNESS EXISTING AC/PCC PAVEMENT, JOIN EXISTING AC PER DETAIL D/C3.01
21. CONSTRUCT CURB AND GUTTER PER RIVERSIDE COUNTY STD 201, MATCH EXISTING GUTTER WIDTH
22. CONSTRUCT LOCAL DEPRESSION PER RCFCWCD STD LD201, CASE C
23. CONSTRUCT CURB OPENING CATCH BASIN NO. 1 PER RCFCWCD STD CB100 W/ ADS STORMFLEX PC CATCH BASIN INLET FILTER AND ALMETEK INDUSTRIES STAINLESS STEEL STORM DRAIN MARKER (PART #SDM-SS, COLOR BLUE, CENTER HOLE, "NO DUMPING ONLY RAIN IN THE DRAIN") W/ RIVET INSTALLATION ADAPTOR (PART #DR250), W=7', V PER PLAN
24. INSTALL 18" ADS N-12WT IB HDPE STORM DRAIN PIPE W/ WARNING TAPE AND TRACER WIRE PER DETAIL A/C3.01
25. INSTALL 36" ADS N-12WT IB HDPE STORM DRAIN PIPE W/ WARNING TAPE AND TRACER WIRE PER DETAIL A/C3.01
26. INSTALL 36" ADS NYLOPLAST MANHOLE PER DETAIL C/C3.01, MANHOLE 1
27. INSTALL 36" ADS NYLOPLAST MANHOLE PER DETAIL C/C3.01, MANHOLE 2
28. INSTALL 36" ADS NYLOPLAST MANHOLE PER DETAIL C/C3.01, MANHOLE 3
29. INSTALL 36" ADS NYLOPLAST MANHOLE PER DETAIL C/C3.01, MANHOLE 4
30. CONSTRUCT STORM DRAIN MANHOLE No. 1 PER RCFCWCD STD MH251 AND PER DETAIL B/C3.01

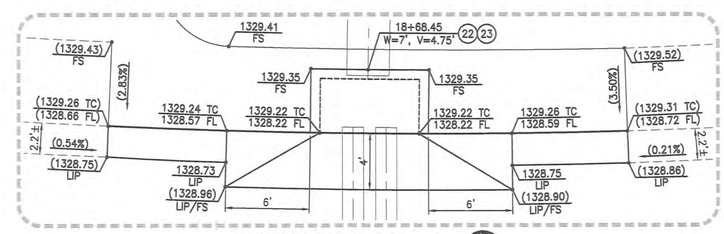

CATCH BASIN No. 1
SCALE: 1"=5'

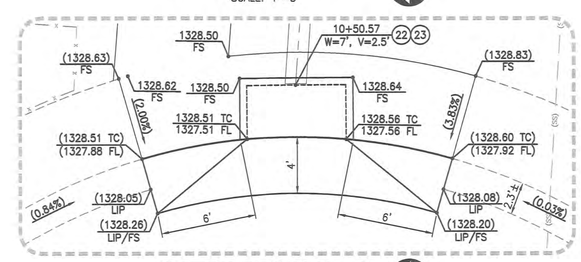

CATCH BASIN No. 2
SCALE: 1"=5'

LATERAL "A" CURVE/LINE DATA

ID	DELTA	BEARING	RADIUS	LENGTH	TANGENT	ID	DELTA	BEARING	RADIUS	LENGTH	TANGENT
A	–	S00°12'50"E	–	139.38'	–	E	45°00'00"	–	45.00'	39.27'	20.71'
B	–	S00°12'50"E	–	112.93'	–	F	–	S00°12'50"E	–	276.63'	–
C	45°00'00"	–	45.00'	39.27'	20.71'	G	82°43'00"	–	50.00'	72.18'	44.02'
D	–	S45°12'50"E	–	64.41'	–	H	–	S82°55'50"E	–	124.49'	–

LATERAL "A-1" CURVE/LINE DATA

ID	DELTA	BEARING	RADIUS	LENGTH	TANGENT
I	–	S89°47'10"W	–	50.55'	–

GRAPHIC SCALE
40 0 20 40 80 120
(IN FEET)
1 inch = 40 ft.

DIGALERT
DIAL BEFORE YOU DIG — TWO WORKING DAYS BEFORE YOU DIG
TOLL FREE 811
A PUBLIC SERVICE BY UNDERGROUND SERVICE ALERT

MARK	BY	DATE	REVISIONS	APPR	DATE

ENGINEER

BENCHMARK
POINT 100
SCRIBED "X" FLUSH ON CONCRETE SLAB APPROXIMATELY 83.5' EAST AND 16.3' SOUTH OF THE SOUTHEAST CORNER OF THE RESTROOM BUILDING, ESTABLISHED AS TEMPORARY BENCH.
ELEVATION: 1327.418

BASIS OF BEARINGS
THE BEARINGS SHOWN HEREON ARE BASED UPON THE THE BEARING OF N00°12'16"W ALONG THE CENTER LINE OF FOLSOM STREET BETWEEN TAHOE STREET AND CLEAR LAKE STREET AS ESTABLISHED PER TRACT No. 22248 IN MB 214/016-020, IN THE CITY OF PERRIS, COUNTY OF RIVERSIDE, STATE OF CALIFORNIA.

APPROVED BY — DATE 08.03.2023
CITY ENGINEER
RCE No.: COUNTERSIGNED
PREPARED BY — DATE 07/26/2023
DAVID MICHAEL BECKWITH
RCE No.: C73761

ENGINEER'S SEAL
REGISTERED PROFESSIONAL ENGINEER — DAVID MICHAEL BECKWITH — No. 73761 — Exp. 06/30/25 — CIVIL — STATE OF CALIFORNIA

PREPARED BY
DAVID BECKWITH AND ASSOCIATES INC
Civil & Structural Engineering - Land Surveying - QSD/QSP Environmental Services
9431 Haven Avenue, Suite 232
Rancho Cucamonga, CA 91730
(T) 714.349.7007 (F) 714.948.4471
www.davidbeckwithandassociates.com

CITY OF PERRIS
COPPER CREEK PARK
PARK IMPROVEMENT PLANS
PRECISE GRADING PLAN
STORM DRAIN

FOR CITY OF PERRIS — W.O.

SHEET No. C2.01
6 OF 09 SHEETS
FILE No. PA-1378

RISK LEVEL 1, WDID/App ID _____

D:\OneDrive - Dbolinc\Projects\2022\2022-19_Copper Creek Park\Grading\PGP\202219pgp06sd.dwg - LAST PLOTTED ON Wed 07/26/23 - 03:35PM BY DBAinc

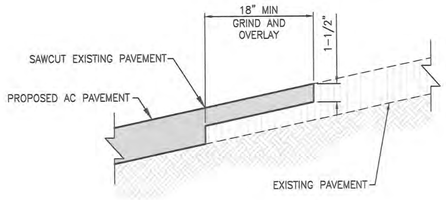

AC PAVEMENT JOIN

NOT TO SCALE

D
–

NOT USED

NOT TO SCALE

–
–

NOT USED

NOT TO SCALE

–
–

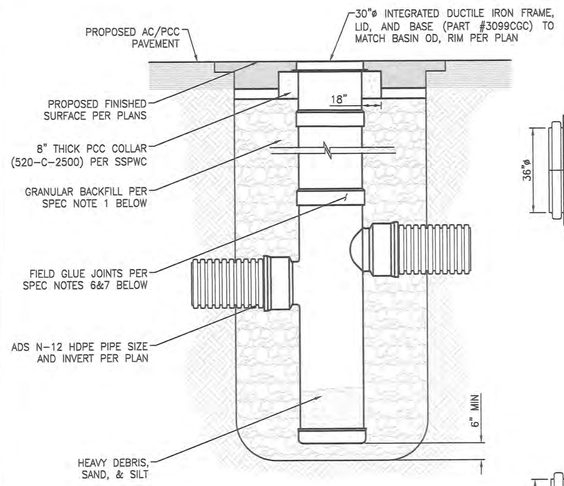

NOTES:

1. THE BACKFILL MATERIAL SHALL BE CRUSHED STONE OR OTHER GRANULAR MATERIAL MEETING THE REQUIREMENTS OF CLASS I OR CLASS II MATERIAL AS DEFINED IN ASTM D2321. BEDDING & BACKFILL FOR SURFACE DRAINAGE INLETS SHALL BE WELL PLACED & COMPACTED UNIFORMLY IN ACCORDANCE WITH ASTM D2321.
2. GRATES AND FRAMES SHALL BE DUCTILE IRON PER ASTM A536 GRADE 70-50-05.
3. DRAIN BASIN TO BE CUSTOM MANUFACTURED ACCORDING TO PLAN DETAILS. RISERS ARE NEEDED FOR BASINS OVER 84" DUE TO SHIPPING RESTRICTIONS.
4. DRAINAGE CONNECTION STUB JOINT TIGHTNESS SHALL CONFORM TO ASTM D3212 FOR CORRUGATED HDPE.
5. NYLOPLAST RISER JOINTS SHALL BE FIELD INSTALLED USING THE GUIDELINES OUTLINED IN ASTM D2855.
6. PVC CEMENT USED SHALL MEET THE REQUIREMENTS OF ASTM D2564.
7. PVC PRIMER USED SHALL MEET THE REQUIREMENTS OF ASTM F656.
8. PVC SURFACE DRAINAGE INLETS SHALL BE OF THE ROAD AND HIGHWAY STRUCTURE TYPE AS INDICATED ON THE CONTRACT DRAWINGS. THE DUCTILE IRON FRAME AND GRATE FOR EACH OF THESE STRUCTURES IS TO BE CONSIDERED AN INTEGRAL PART OF THE SURFACE DRAINAGE INLET AND SHALL BE FURNISHED BY THE SAME MANUFACTURER. THE ROAD AND HIGHWAY STRUCTURE SHALL BE AS MANUFACTURED BY NYLOPLAST, A DIVISION OF ADVANCED DRAINAGE SYSTEMS, INC OR PRIOR APPROVED EQUAL.
9. THE ROAD AND HIGHWAY STRUCTURE REQUIRED FOR THIS CONTRACT SHALL BE MANUFACTURED FROM PVC PIPE STOCK, UTILIZING A THERMO-MOLDING PROCESS TO REFORM THE PIPE STOCK TO THE SPECIFIED CONFIGURATION. THE DRAINAGE PIPE CONNECTION SHALL BE MANUFACTURED FROM PVC STOCK AND FORMED TO PROVIDE A WATERTIGHT CONNECTION WITH THE SPECIFIED PIPE SYSTEM. THE JOINT TIGHTNESS SHALL CONFORM TO ASTM D3212 FOR JOINTS FOR DRAIN AND SEWER PLASTIC PIPE USING FLEXIBLE ELASTOMERIC SEALS. THE FLEXIBLE ELASTOMERIC SEALS SHALL CONFORM TO ASTM F477. THE PIPE BELL SPIGOT SHALL BE JOINED TO THE MAIN BODY OF THE STRUCTURE. THE RAW MATERIAL USED TO MANUFACTURE THE PIPE STOCK THAT IS USED TO MANUFACTURE THE MAIN BODY AND PIPE STUBS OF THE SURFACE DRAINAGE INLET SHALL CONFORM TO ASTM D178 CELL CLASS 12454.
10. THE GRATE AND FRAME FOR ALL ROAD AND HIGHWAY STRUCTURES SHALL BE DUCTILE IRON AND SHALL BE MADE SPECIFICALLY FOR EACH SO AS TO PROVIDE A ROUND BOTTOM FLANGE THAT CLOSELY MATCHES THE DIAMETER OF THE PVC BASIN BODY. THE GRATE AND FRAME SHALL BE CAPABLE OF SUPPORTING H-20 WHEEL LOADING FOR THE TRAFFIC AREAS. THE METAL USED IN THE MANUFACTURE OF THE CASTING SHALL CONFORM TO ASTM A536 GRADE 70-50-05 FOR DUCTILE IRON.
11. THE SPECIFIED PVC ROAD AND HIGHWAY STRUCTURE SHALL BE INSTALLED USING CONVENTIONAL FLEXIBLE PIPE BACKFILL MATERIALS AND PROCEDURES. THE BACKFILL MATERIAL SHALL BE CRUSHED STONE OR OTHER GRANULAR MATERIAL MEETING THE REQUIREMENTS OF CLASS 1 OR 2 MATERIAL AS DEFINED IN ASTM D2321. BEDDING AND BACKFILL FOR THE ROAD AND HIGHWAY STRUCTURE SHALL BE PLACED AND COMPACTED UNIFORMLY IN ACCORDANCE WITH ASTM D2321. THE ROAD AND HIGHWAY STRUCTURE BODY WILL BE CUT AT THE TIME OF THE FINAL GRADE. NO BRICK, STONE, OR CONCRETE BLOCK WILL BE REQUIRED TO SET THE GRATE TO THE FINAL GRADE HEIGHT. FOR H-20 LOAD RATED INSTALLATIONS, A CONCRETE RING WILL BE POURED UNDER AND AROUND THE GRATE AND FRAME. THE CONCRETE SLAB MUST BE DESIGNED TAKING INTO CONSIDERATION LOCAL SOIL CONDITIONS, TRAFFIC LOADING, AND OTHER APPLICABLE DESIGN FACTORS. FOR OTHER INSTALLATION CONSIDERATIONS SUCH AS MIGRATION OF FINES, GROUND WATER, AND SOFT FOUNDATIONS, REFER TO ASTM D2321 GUIDELINES.

NYLOPLAST MANHOLE

NOT TO SCALE

C
–

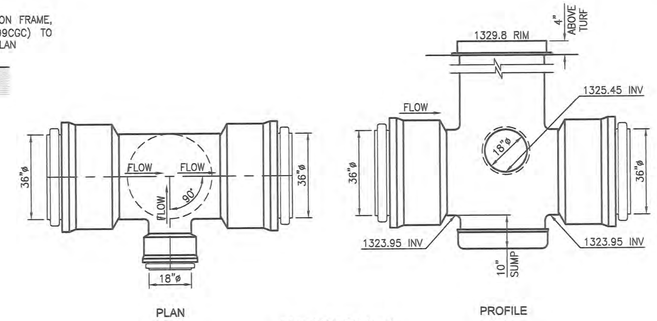

MANHOLE No. 1

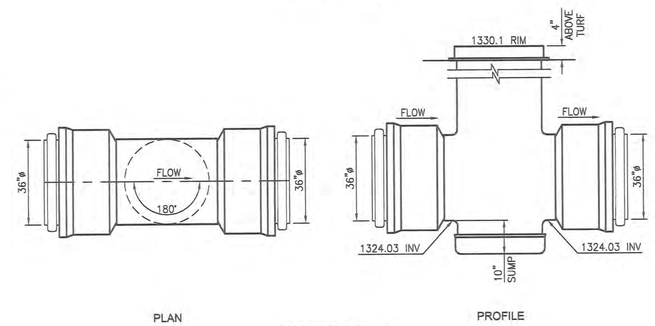

MANHOLE No. 2

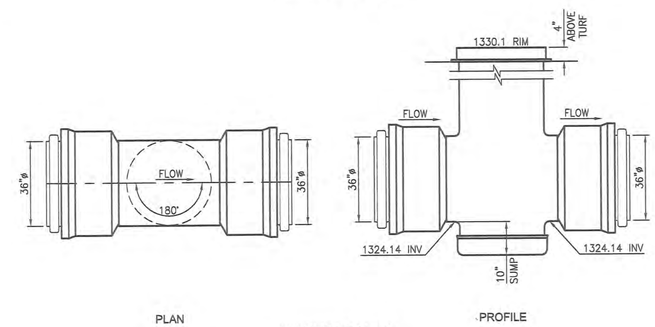

MANHOLE No. 3

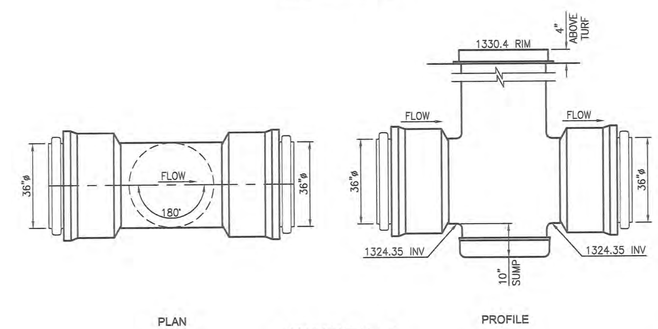

MANHOLE No. 4

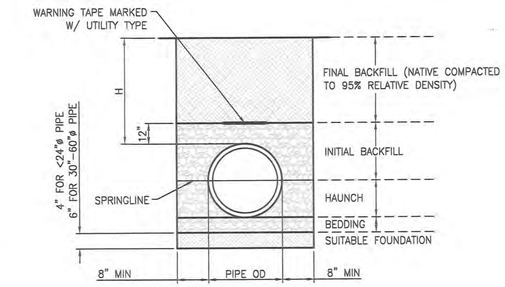

NOTES:

1. ALL PIPE SYSTEMS SHALL BE INSTALLED IN ACCORDANCE WITH ASTM D2321, "STANDARD PRACTICE FOR UNDERGROUND INSTALLATION OF THERMOPLASTIC PIPE FOR SEWERS AND OTHER GRAVITY FLOW APPLICATIONS", LATEST ADDITION.
2. MEASURES SHOULD BE TAKEN TO PREVENT MIGRATION OF NATIVE FINES INTO BACKFILL MATERIAL.
3. FOUNDATION: WHERE THE TRENCH BOTTOM IS UNSTABLE, THE CONTRACTOR SHALL EXCAVATE TO A DEPTH REQUIRED BY THE ENGINEER AND REPLACE WITH SUITABLE MATERIAL AS SPECIFIED BY THE ENGINEER. AS AN ALTERNATIVE AND AT THE DISCRETION OF THE DESIGN ENGINEER, THE TRENCH BOTTOM MAY BE STABILIZED USING A GEOTEXTILE MATERIAL.
4. BEDDING: SUITABLE MATERIAL SHALL BE CLASS I, II OR III. THE CONTRACTOR SHALL PROVIDE DOCUMENTATION FOR MATERIAL SPECIFICATION TO ENGINEER. UNLESS OTHERWISE NOTED BY THE ENGINEER, MINIMUM BEDDING THICKNESS SHALL BE 4" FOR <24"ø PIPE; 6" FOR 30"-60"ø PIPE.
5. INITIAL BACKFILL: SUITABLE MATERIAL SHALL BE CLASS II OR III IN THE PIPE ZONE EXTENDING NOT LESS THAN 12" ABOVE CROWN OF PIPE. THE CONTRACTOR SHALL PROVIDE DOCUMENTATION FOR MATERIAL SPECIFICATION TO ENGINEER. MATERIAL SHALL BE INSTALLED AS REQUIRED IN ASTM D2321, LATEST EDITION.
6. MINIMUM COVER: MINIMUM COVER, H, IN NON-TRAFFIC APPLICATIONS (GRASS OR LANDSCAPE AREAS) IS 12" FROM THE TOP OF PIPE TO GROUND SURFACE. ADDITIONAL COVER MAY BE REQUIRED TO PREVENT FLOTATION. FOR TRAFFIC APPLICATIONS, MINIMUM COVER, H, IS 12" UP TO 48"ø PIPE AND 24" OF COVER FOR 54"-60"ø PIPE, MEASURED FROM TOP OF PIPE TO BOTTOM OF FLEXIBLE PAVEMENT OR TO TOP OF RIGID PAVEMENT.

PIPE BEDDING

NOT TO SCALE

A
–

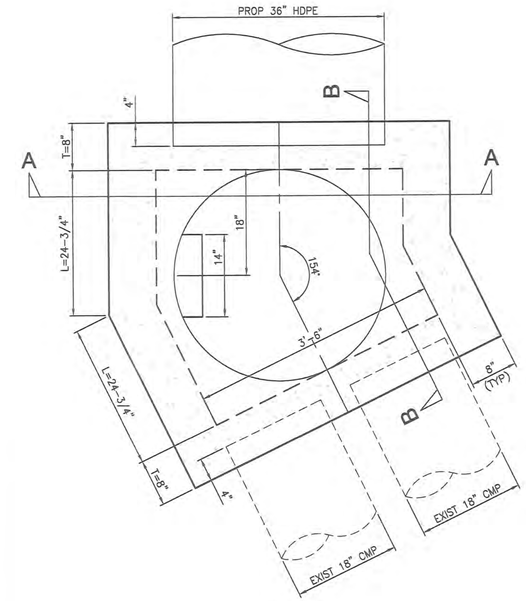

MANHOLE No. 1 MODIFICATIONS

NOT TO SCALE

B
–

DIGALERT
DIAL BEFORE YOU DIG
TWO WORKING DAYS BEFORE YOU DIG
TOLL FREE 811
A PUBLIC SERVICE BY UNDERGROUND SERVICE ALERT

MARK	BY	DATE	REVISIONS	APPR	DATE
				MJPA	

ENGINEER

BENCHMARK

POINT 100

SCRIBED "X" FLUSH ON CONCRETE SLAB APPROXIMATELY 83.5' EAST AND 16.3' SOUTH OF THE SOUTHEAST CORNER OF THE RESTROOM BUILDING, ESTABLISHED AS TEMPORARY BENCH.

ELEVATION: 1327.418

BASIS OF BEARINGS

THE BEARINGS SHOWN HEREON ARE BASED UPON THE THE BEARING OF N00°12'16"W ALONG THE CENTER LINE OF FOLSOM STREET BETWEEN TAHOE STREET AND CLEAR LAKE STREET AS ESTABLISHED PER TRACT No. 22248 IN MB 214/016-020, IN THE CITY OF PERRIS, COUNTY OF RIVERSIDE, STATE OF CALIFORNIA.

APPROVED BY DATE 08.05.2023

CITY ENGINEER

RCE No.:

PREPARED BY DATE 07/26/2023

DAVID MICHAEL BECKWITH

RCE No.: C73761

ENGINEER'S SEAL

REGISTERED PROFESSIONAL ENGINEER DAVID MICHAEL BECKWITH No. 73761 Exp. 06/30/25 CIVIL STATE OF CALIFORNIA

PREPARED BY

DAVID BECKWITH AND ASSOCIATES INC

Civil & Structural Engineering - Land Surveying - QSD/QSP Environmental Services

9431 Haven Avenue, Suite 232
Rancho Cucamonga, CA 91730

(T) 714.349.7007 (F) 714.948.4471
www.davidbeckwithandassociates.com

CITY OF PERRIS

COPPER CREEK PARK

PARK IMPROVEMENT PLANS

PRECISE GRADING PLAN
DETAIL SHEET

FOR **CITY OF PERRIS** W.O.

SHEET No. **C3.01**
7
OF 09 SHEETS

FILE No. **PA-1378**

D:\OneDrive - Dbainc\Projects\2022\2022-19_Copper Creek Park\Grading\PGP\202219pgp07d.dwg - LAST PLOTTED ON Wed 07/26/23 - 03:35PM BY DBAinc

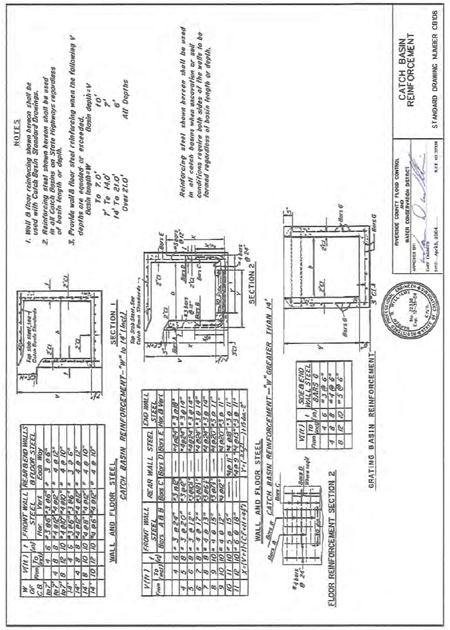

RCFCWCD STD CB106: CB REINFORCEMENT

NOT TO SCALE

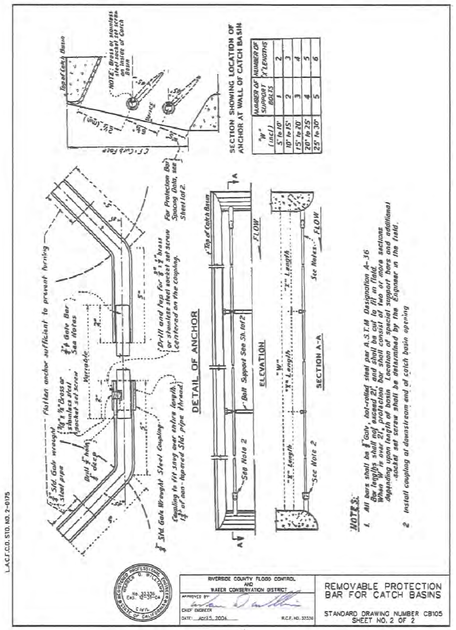

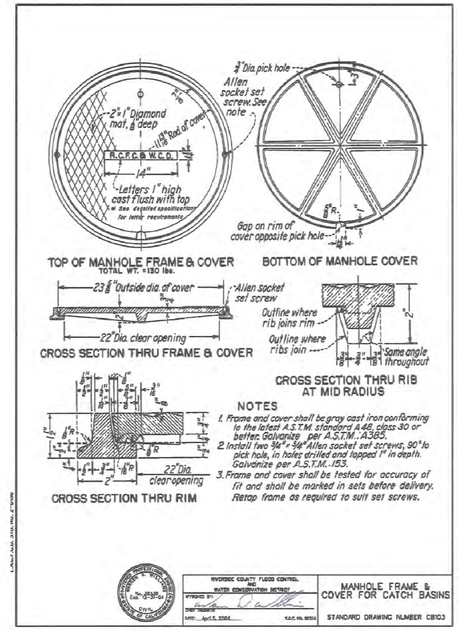

RCFCWCD STD CB103: MANHOLE FRAME AND COVER

NOT TO SCALE

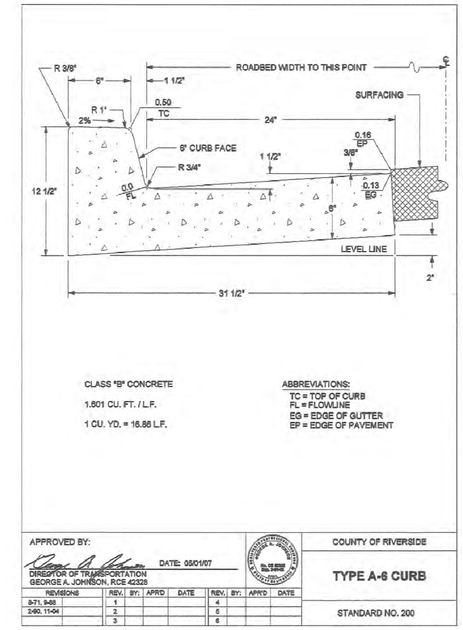

RIVERSIDE COUNTY STD 200: A-6 CURB

NOT TO SCALE

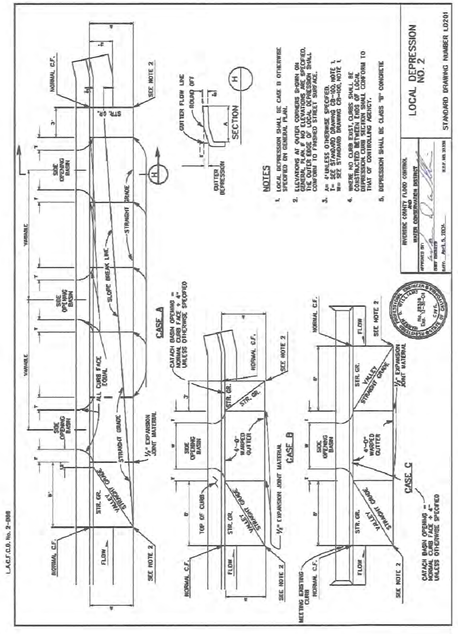

RCFCWCD STD LD201: LOCAL DEPRESSION No. 2

NOT TO SCALE

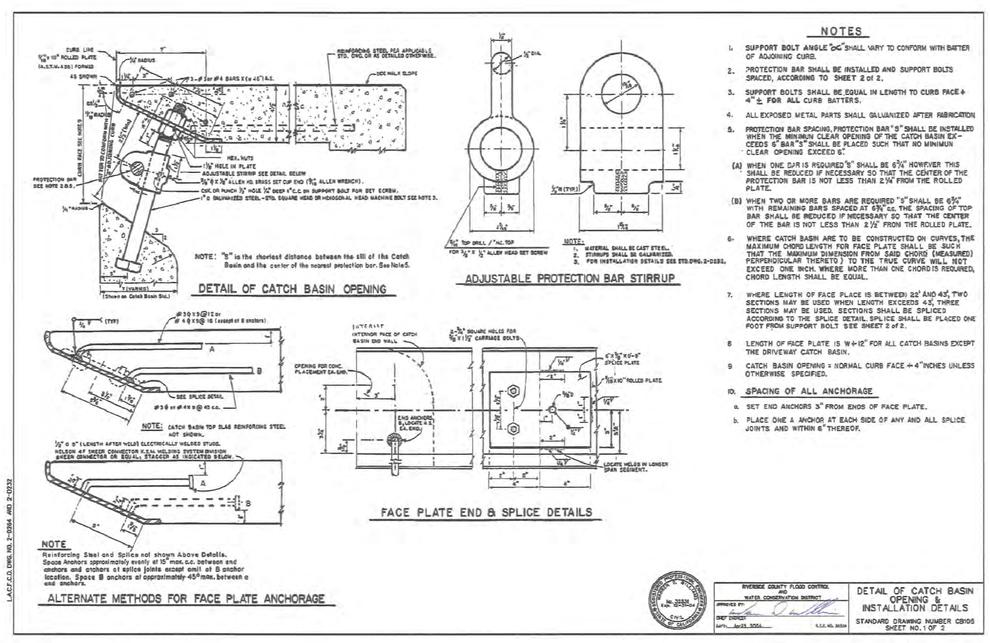

RCFCWCD STD CB105: CATCH BASIN OPENING AND INSTALLATION DETAILS

NOT TO SCALE

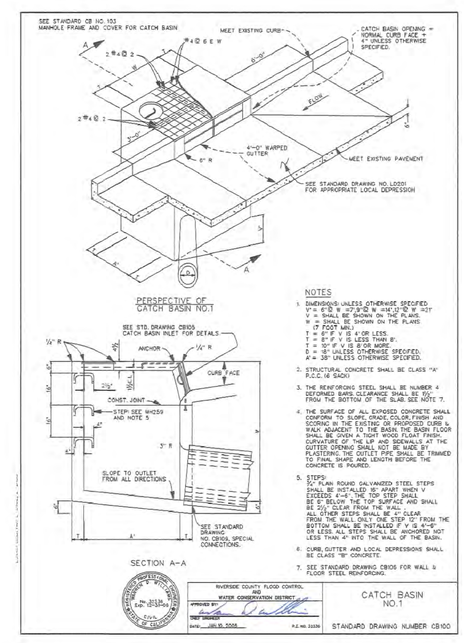

RCFCWCD STD CB100: CATCH BASIN No. 1

NOT TO SCALE

DIGALERT
DIAL BEFORE YOU DIG — TWO WORKING DAYS BEFORE YOU DIG
TOLL FREE 811
A PUBLIC SERVICE BY UNDERGROUND SERVICE ALERT

MARK	BY	DATE	REVISIONS	APPR	DATE
ENGINEER				MJPA	

BENCHMARK

POINT 100

SCRIBED "X" FLUSH ON CONCRETE SLAB APPROXIMATELY 83.5' EAST AND 16.3' SOUTH OF THE SOUTHEAST CORNER OF THE RESTROOM BUILDING, ESTABLISHED AS TEMPORARY BENCH.

ELEVATION: 1327.418

BASIS OF BEARINGS

THE BEARINGS SHOWN HEREON ARE BASED UPON THE THE BEARING OF N00°12'16"W ALONG THE CENTER LINE OF FOLSOM STREET BETWEEN TAHOE STREET AND CLEAR LAKE STREET AS ESTABLISHED PER TRACT No. 22248 IN MB 214/016-020, IN THE CITY OF PERRIS, COUNTY OF RIVERSIDE, STATE OF CALIFORNIA.

APPROVED BY — DATE 08-23-2023
CITY ENGINEER
RCE No.:

PREPARED BY — DATE 07/26/2023
DAVID MICHAEL BECKWITH
RCE No.: C73761

ENGINEER'S SEAL
REGISTERED PROFESSIONAL ENGINEER — DAVID MICHAEL BECKWITH — No. 73761 — Exp. 06/30/25 — CIVIL — STATE OF CALIFORNIA

PREPARED BY
DAVID BECKWITH AND ASSOCIATES INC
Civil & Structural Engineering - Land Surveying - QSD/QSP Environmental Services
9431 Haven Avenue, Suite 232
Rancho Cucamonga, CA 91730
(T) 714.349.7007 (F) 714.948.4471
www.davidbeckwithandassociates.com

CITY OF PERRIS
COPPER CREEK PARK
PARK IMPROVEMENT PLANS
PRECISE GRADING PLAN
AGENCY STANDARD PLANS

FOR CITY OF PERRIS — W.O.

SHEET No. C3.02 8 OF 09 SHEETS
FILE No. PA-1378

D:\OneDrive - Dbainc\Projects\2022\2022-19_Copper Creek Park\Grading\PGP\202219pgp08dt.dwg — LAST PLOTTED ON Wed 07/26/23 — 03:36PM BY DBInc

NOT USED
NOT TO SCALE

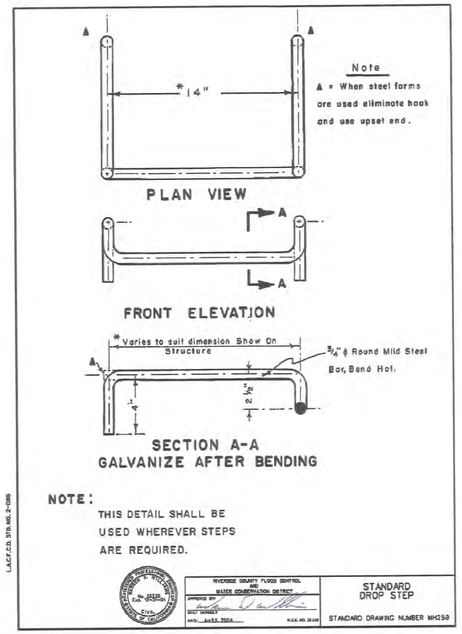

RCFCWCD STD MH259: STANDARD DROP STEP
NOT TO SCALE

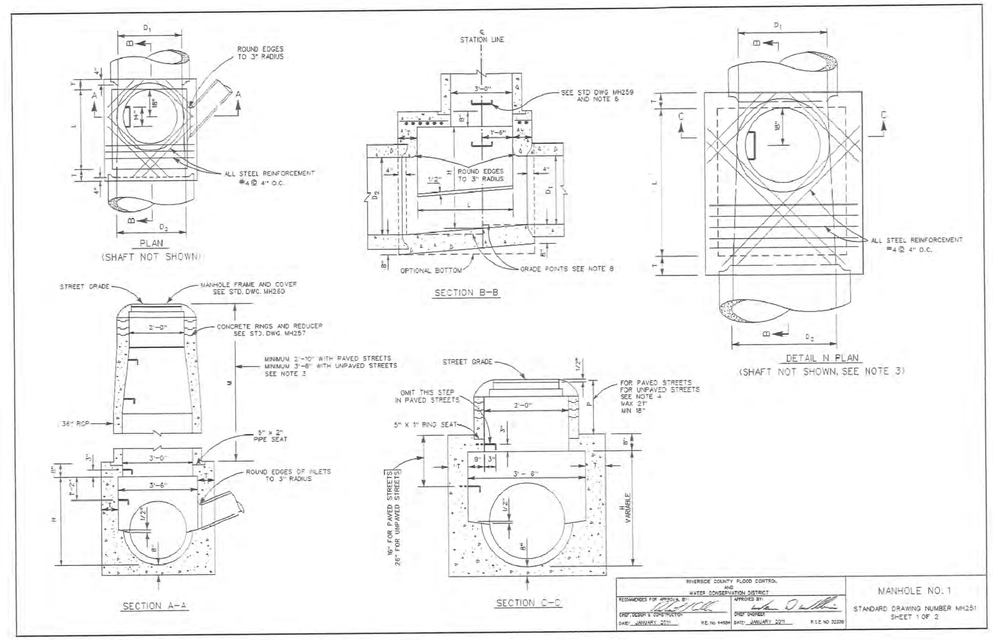

RCFCWCD STD MH251: MANHOLE No. 1
NOT TO SCALE

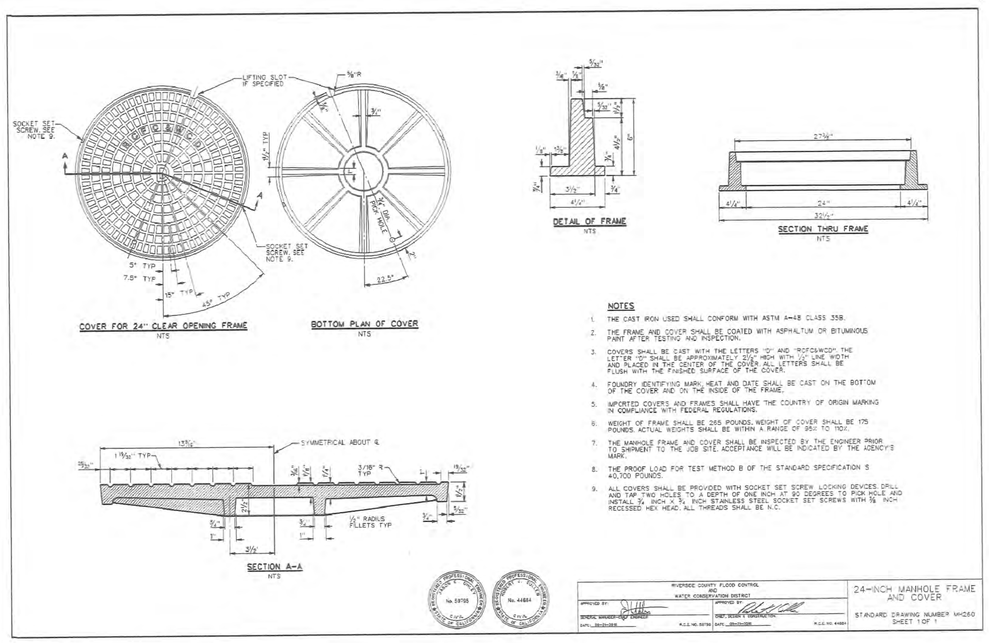

RCFCWCD STD MH201: 24" MANHOLE FRAME AND COVER
NOT TO SCALE

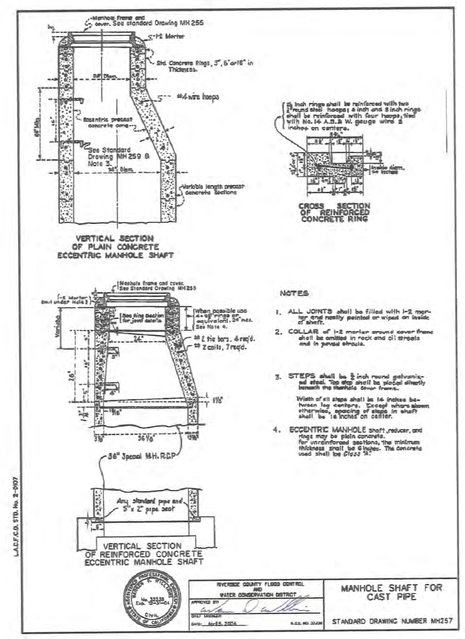

RCFCWCD STD MH257: MANHOLE SHAFT
NOT TO SCALE

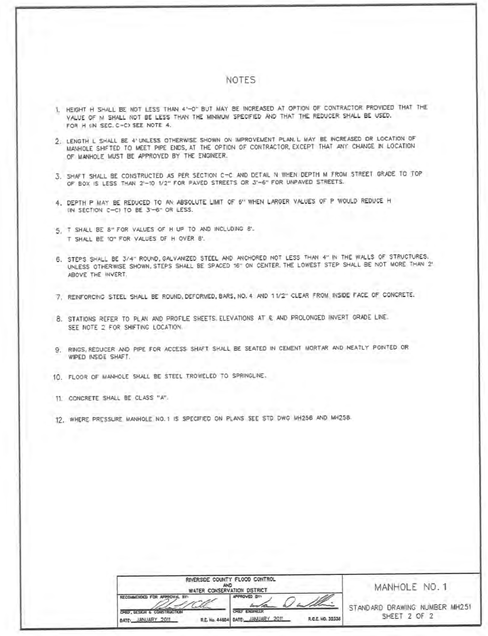

RCFCWCD STD MH251: MANHOLE No. 1
NOT TO SCALE

DIGALERT — DIAL BEFORE YOU DIG — TWO WORKING DAYS BEFORE YOU DIG — TOLL FREE 811 — A PUBLIC SERVICE BY UNDERGROUND SERVICE ALERT

MARK	BY	DATE	REVISIONS	APPR	DATE
ENGINEER				MJPA	

BENCHMARK
POINT 100
SCRIBED "X" FLUSH ON CONCRETE SLAB APPROXIMATELY 83.5' EAST AND 16.3' SOUTH OF THE SOUTHEAST CORNER OF THE RESTROOM BUILDING, ESTABLISHED AS TEMPORARY BENCH.
ELEVATION: 1327.418

BASIS OF BEARINGS
THE BEARINGS SHOWN HEREON ARE BASED UPON THE THE BEARING OF N00°12'16"W ALONG THE CENTER LINE OF FOLSOM STREET BETWEEN TAHOE STREET AND CLEAR LAKE STREET AS ESTABLISHED PER TRACT No. 22248 IN MB 214/016-020, IN THE CITY OF PERRIS, COUNTY OF RIVERSIDE, STATE OF CALIFORNIA.

APPROVED BY — DATE 08.03.2023
CONTRACT CITY ENGINEER
RCE No.:

PREPARED BY — DATE 07/26/2023
DAVID MICHAEL BECKWITH
RCE No.: C73761

ENGINEER'S SEAL — REGISTERED PROFESSIONAL ENGINEER — DAVID MICHAEL BECKWITH — No. 73761 — Exp. 06/30/25 — CIVIL — STATE OF CALIFORNIA

PREPARED BY
DAVID BECKWITH AND ASSOCIATES INC
Civil & Structural Engineering - Land Surveying - QSD/QSP Environmental Services
9431 Haven Avenue, Suite 232
Rancho Cucamonga, CA 91730
(T) 714.349.7007 (F) 714.948.4471
www.davidbeckwithandassociates.com

CITY OF PERRIS
COPPER CREEK PARK
PARK IMPROVEMENT PLANS
PRECISE GRADING PLAN
AGENCY STANDARD PLANS

FOR CITY OF PERRIS | W.O.

SHEET No. C3.03
9 OF 09 SHEETS
FILE No. PA-1378

D:\OneDrive - Dbainc\Projects\2022\2022-19_Copper Creek Park\Grading\PGP\202219pgp09b6.dwg - LAST PLOTTED ON: Wed 07/26/23 - 03:37PM BY: DBAInc

UTILITY GENERAL NOTES

1. UTILITY POINTS OF SERVICE AND WORK/ MATERIAL SHOWN ARE BASED ON PRELIMINARY INFORMATION ONLY BY THE UTILITY COMPANIES AND ARE FOR BID PURPOSES ONLY.

2. CONTRACTOR SHALL EXERCISE EXTREME CAUTION IN EXCAVATING AND TRENCHING ON THIS SITE TO AVOID EXISTING DUCTS, PIPING OR CONDUITS, ETC. TO PREVENT HAZARD TO PERSONNEL AND OR DAMAGE TO EXISTING UNDERGROUND UTILITIES OR STRUCTURES WHETHER OR NOT SHOWN OR INSTALLED BY ANY OTHER CONTRACTS. THE ENGINEER IS NOT RESPONSIBLE FOR THE LOCATION OF UNDERGROUND UTILITIES OR STRUCTURES WHETHER OR NOT SHOWN OR INSTALLED BY ANY OTHER CONTRACTS. THE CONTRACTOR SHALL IMMEDIATELY NOTIFY THE ENGINEER SHOULD SUCH UNIDENTIFIED CONDITIONS BE DISCOVERED. THESE DRAWINGS AND SPECIFICATION DO NOT INCLUDE THE NECESSARY ELEMENTS FOR CONSTRUCTION SAFETY.

3. CONTRACTOR SHALL BE RESPONSIBLE FOR THE FOLLOWING ITEMS AND SHALL INCLUDE ALL COST IN BID:
   - –IDENTIFYING POWER TELEPHONE AND CABLE TV UTILITY COMPANY SERVICE PLANNER.
   - –SUBMITTAL OF PLANS AND ELECTRONIC FILES TO UTILITY COMPANY.
   - –APPROVAL OF PLANS AND FINAL DRAWING FROM UTILITY COMPANY.
   - –ALL COORDINATION WITH UTILITY COMPANY.
   - –INSTALLATION OF ALL REQUIRED CONDUIT, PULL WIRES CABLES, PULL BOXES, CONCRETE EASEMENT OF CONDUIT (IF REQUIRED) TRANSFORMER SLAB BOX, PROTECTION BARRIERS, POLE RISERS, TRENCHING AND BACKFILL.
   - –SUBMITTAL OF SHOP DRAWINGS FOR METERED PANEL TO UTILITY CO. FOR UTILITY CO. APPROVAL PRIOR TO ORDERING AND INSTALLATION OF METER PANEL.

4. CALL "UNDERGROUND ALERT" BEFORE YOU DIG. SOUTHERN CALIFORNIA: 1 (800) 227–2600

SITE PLAN NOTES:

1. 5"C.O. INSTALLED PER LOCAL POWER UTILITY COMPANY REQUIREMENTS TO PICK–UP POINT. VERIFY PRIOR TO ROUGH–IN. CONTRACTOR SHALL BE RESPONSIBLE FOR THE FOLLOWING ITEMS AND SHALL INCLUDE ALL COST IN BID.
2. 72" x 94"' CONCRETE PAD INSTALLED FOR LOCAL UTILITY COMPANY REQUIREMENTS.
3. (2) 5"C.O. INSTALLED PER LOCAL POWER COMPANY REQUIREMENTS.
4. PULLBOX INSTALLED PER LOCAL UTILITY COMPANY REQUIREMENTS.
5. 4"C.O. INSTALLED PER LOCAL TELEPHONE COMPANY
6. 4"C.O. INSTALLED PER LOCAL CABLE TV COMPANY
7. CONTACTOR SHALL OBTAIN SEPARATE PERMIT AND REQUIRED TRAFFIC CONTROL FOR CROSSING STREET.
8. VERIFY EXACT CONNECTION POINT PRIOR TO ROUGH–IN.
9. MOUNT ON EXTERIOR OF BUILDING ABOVE INTERIOR ATTIC SPACE.
10. PROVIDE 4'x4'x3/4" PLYWOOD BACKBOARD.
11. VERIFY EXACT LOCATION WITH CITY PRIOR TO ROUGH–IN.
12. CONTACTOR SHALL REMOVE ALL NON USED CIRCUIT BREAKERS AND PROVIDE BLANK COVER.

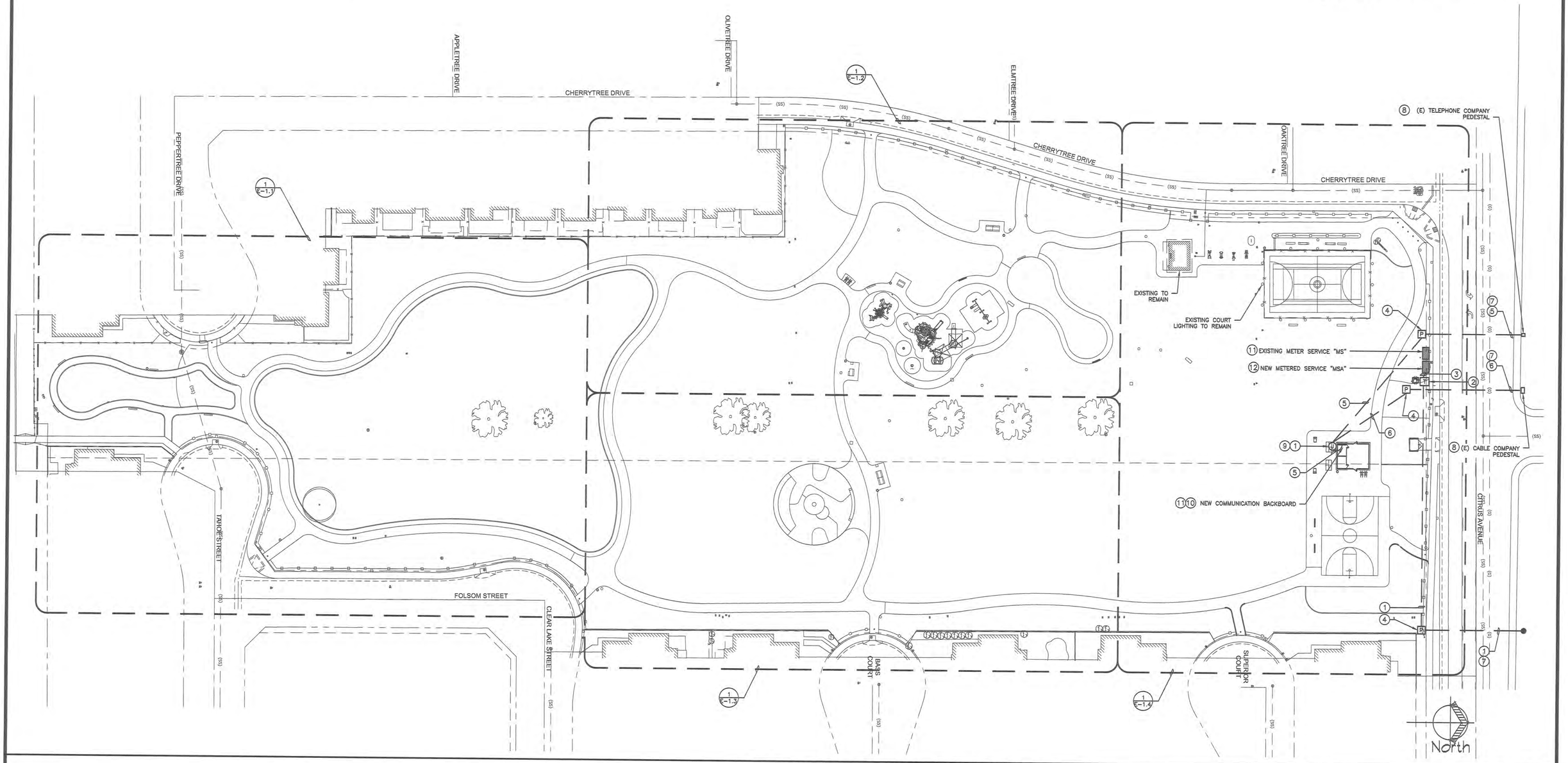

ELECTRICAL SITE AND UTILITY PLAN

SCALE 1"=40'-0" (1)

JCA Engineering Inc.
Electrical Engineering & Consulting
8048 Palm Ave
Highland, Ca. 92346
909 864-0223
Fax 909 864-0280
james.corns@jcaeng.com
JOB # 2865
JAMES CORNS

DIGALERT
DIAL BEFORE YOU DIG — TWO WORKING DAYS BEFORE YOU DIG
TOLL FREE 1-800-227-2600
A PUBLIC SERVICE BY UNDERGROUND SERVICE ALERT

DATE	BY	MARK	REVISIONS	APPR.	DATE

ENGINEER — CITY
DESIGNED BY: GM, AL DRAWN BY: AL CHECKED BY: DG

SEAL: REGISTERED PROFESSIONAL ENGINEER JOSEPH J RUBINO III No. E 11795 EXP. 9/30/24 ELECTRICAL STATE OF CALIFORNIA

APPROVED BY: DATE
CITY ENGINEER
R.C.E. NO. EXP. DATE 08-03-2023
PREPARED BY: DATE
LANDSCAPE ARCHITECT
L.L.A NO. EXP. DATE

BENCHMARK
SCALE AS SHOWN
DATE

RHA LANDSCAPE ARCHITECTS PLANNERS, INC.
6800 INDIANA AVENUE, SUITE #245
RIVERSIDE, CA 92506
LIC. #2799
PH. (951) 781-1930
FAX (951) 686-8091

CITY OF PERRIS
COPPER CREEK PARK
PARK IMPROVEMENT PLANS
ELECTRICAL SITE AND UTILITY PLAN
FOR CITY OF PERRIS W.O.

SHEET NO. **E-1.0**
1 OF 9 SHEETS
FILE NO. RHA# 22154

SITE PLAN NOTES:

1. 1"C. 2 #10 & 1 #10 E/G.
2. 1"C. 4 #10 & 1 #10 E/G.
3. 1"C. 2 #8 & 1 #10 E/G. ROUTE AROUND POLE BASES
4. POLE FOR FUTURE CAMERAS SEE E-3.0 DETAIL #3 COIL UP AND TAPE OFF 24" OF SLACK

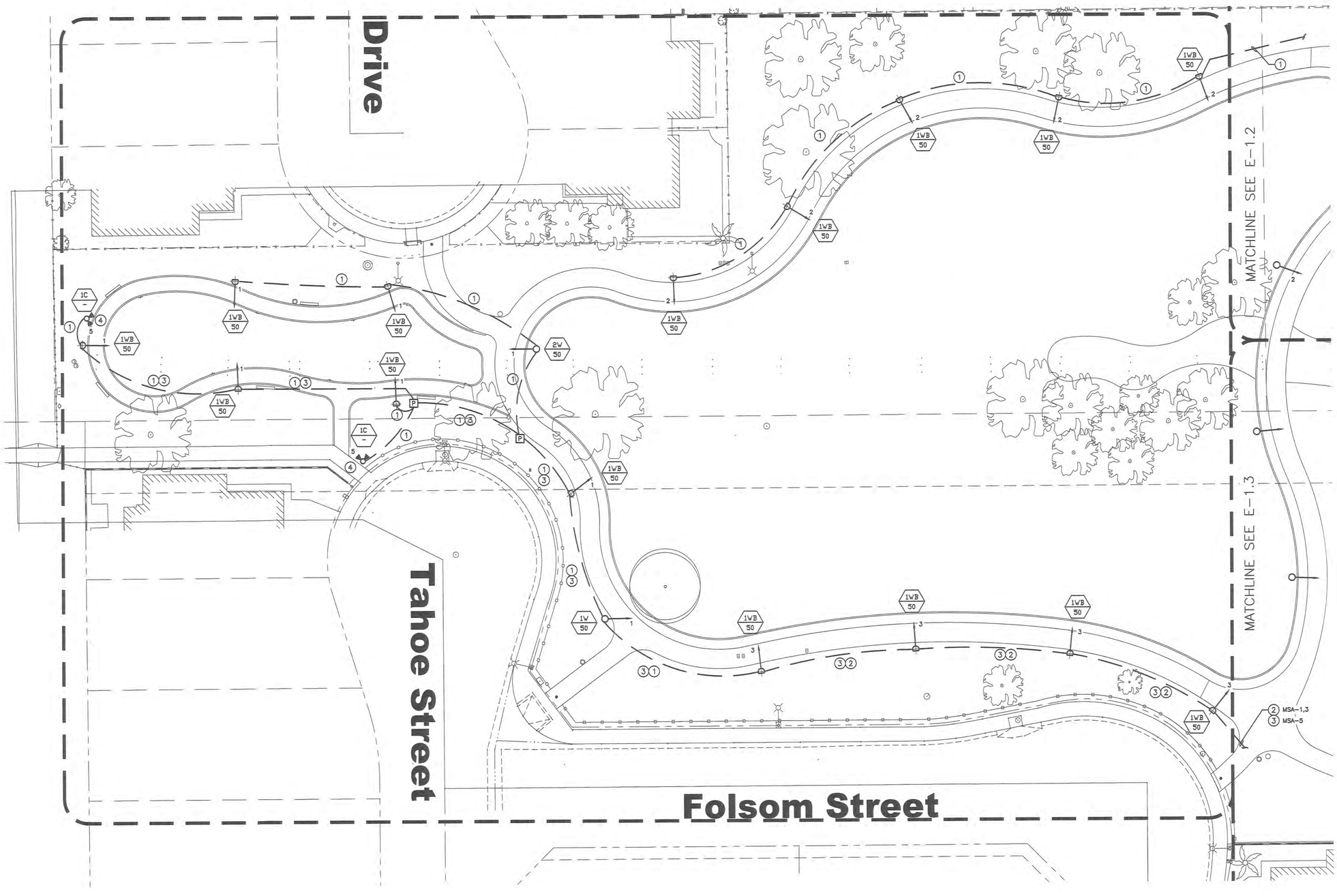

PARTIAL ELECTRICAL SITE PLAN

SCALE 1"=20'-0"

1

JCA Engineering Inc.
Electrical Engineering & Consulting
8048 Palm Ave
Highland, Ca. 92346
909 864-0223
Fax 909 864-0280
james.corns@jcaeng.com
Job # 2865
J.M. James Corns

DIGALERT
DIAL BEFORE YOU DIG
TWO WORKING DAYS BEFORE YOU DIG
TOLL FREE 1-800-227-2600
A PUBLIC SERVICE BY UNDERGROUND SERVICE ALERT

DATE	BY	MARK		APPR.	DATE
ENGINEER			REVISIONS	CITY	

DESIGNED BY: GM, AL DRAWN BY: AL CHECKED BY: DG

SEAL: REGISTERED PROFESSIONAL ENGINEER JOSEPH J RODRIGUEZ No. E 11795 EXP. 9/30/24 ELECTRICAL STATE OF CALIFORNIA

APPROVED BY: DATE
CITY ENGINEER
R.C.E. NO. EXP. DATE 08-03-2023
PREPARED BY: DATE
LANDSCAPE ARCHITECT
L.L.A NO. EXP. DATE

BENCHMARK

SCALE AS SHOWN
DATE

RHA LANDSCAPE ARCHITECTS PLANNERS, INC.
6800 INDIANA AVENUE,
SUITE #245
RIVERSIDE, CA 92506
LIC. #2799
PH. (951) 781-1930
FAX (951) 686-8091

CITY OF PERRIS
COPPER CREEK PARK
PARK IMPROVEMENT PLANS
PARTIAL ELECTRICAL SITE PLAN

FOR CITY OF PERRIS W.O.

SHEET NO. **E-1.1**
2 OF 9 SHEETS
FILE NO. RHA# 22154

SITE PLAN NOTES:

1. 1"C. 2 #10 & 1 #10 E/G.
2. 1"C. 4 #10 & 1 #10 E/G.
3. NOT USED
4. POLE FOR FUTURE CAMERAS SEE E-3.0 DETAIL #3 COIL UP AND TAPE OFF 24" OF SLACK
5. 1"C. 6 #10 & 1 #10 E/G.
6. 1 1/4"C. 8 #8 & 1 #10 E/G. ROUTE AROUND POLE BASES

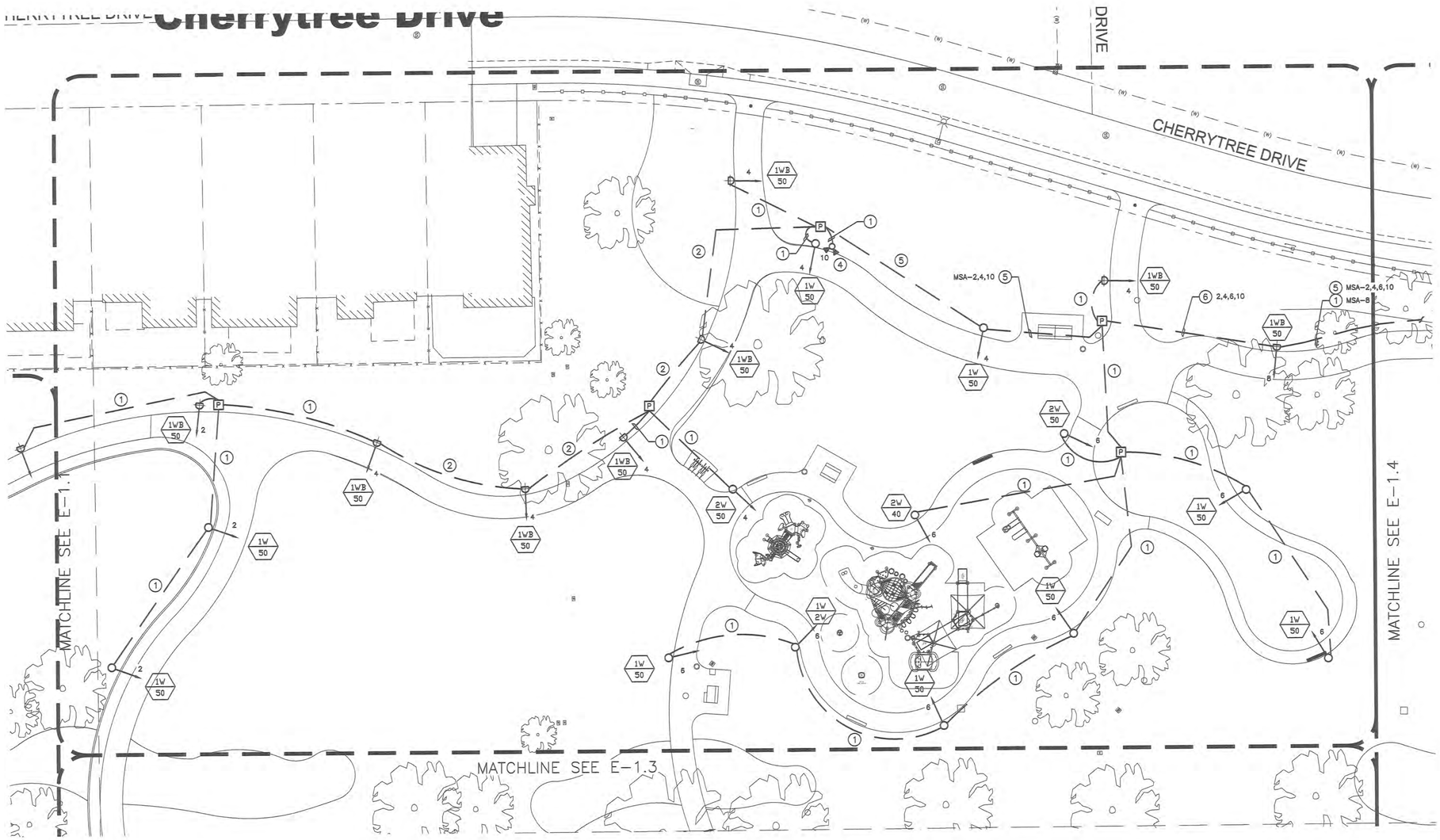

PARTIAL ELECTRICAL SITE PLAN

SCALE 1"=20'-0"

1

JCA Engineering Inc.
Electrical Engineering & Consulting
8048 Palm Ave
Highland, Ca. 92346
909 864-0223
Fax 909 864-0280
james.corns@jcaeng.com
Job # 2865
P.R. James Corns

DIGALERT
DIAL BEFORE YOU DIG
TWO WORKING DAYS BEFORE YOU DIG
TOLL FREE 1-800-227-2600
A PUBLIC SERVICE BY UNDERGROUND SERVICE ALERT

DATE	BY	MARK	REVISIONS	APPR.	DATE

ENGINEER — CITY

DESIGNED BY: GM, AL — DRAWN BY: AL — CHECKED BY: DG

SEAL: REGISTERED PROFESSIONAL ENGINEER — JAMES J. RODRIGUEZ — No. E 11795 — EXP. 9/30/24 — ELECTRICAL — STATE OF CALIFORNIA

APPROVED BY: _____ DATE _____
CONTRACT CITY ENGINEER
R.C.E. NO. _____ EXP. DATE 08-03-2023

PREPARED BY: _____ DATE _____
LANDSCAPE ARCHITECT
L.L.A NO. _____ EXP. DATE _____

BENCHMARK

SCALE AS SHOWN

DATE

RHA LANDSCAPE ARCHITECTS PLANNERS, INC.
6800 INDIANA AVENUE,
SUITE #245
RIVERSIDE, CA 92506
LIC. #2799
PH. (951) 781-1930
FAX (951) 686-8091

CITY OF PERRIS
COPPER CREEK PARK
PARK IMPROVEMENT PLANS
PARTIAL ELECTRICAL SITE PLAN

FOR CITY OF PERRIS — W.O.

SHEET NO. **E-1.2**
3 OF 9 SHEETS
FILE NO. RHA# 22154

SITE PLAN NOTES:

1. 1"C. 2 #10 & 1 #10 E/G.
2. 1"C. 4 #10 & 1 #10 E/G.
3. 1"C. 2 #8 & 1 #10 E/G. ROUTE AROUND POLE BASES
4. POLE FOR FUTURE CAMERAS SEE E-3.0 DETAIL #3 COIL UP AND TAPE OFF 24" OF SLACK
5. 1"C. 6 #10 & 1 #10 E/G.
6. NOT USED
7. 1"C. 4 #8 & 1 #10 E/G. ROUTE AROUND POLE BASES
8. 1"C. 6 #8 & 1 #10 E/G. ROUTE AROUND POLE BASES

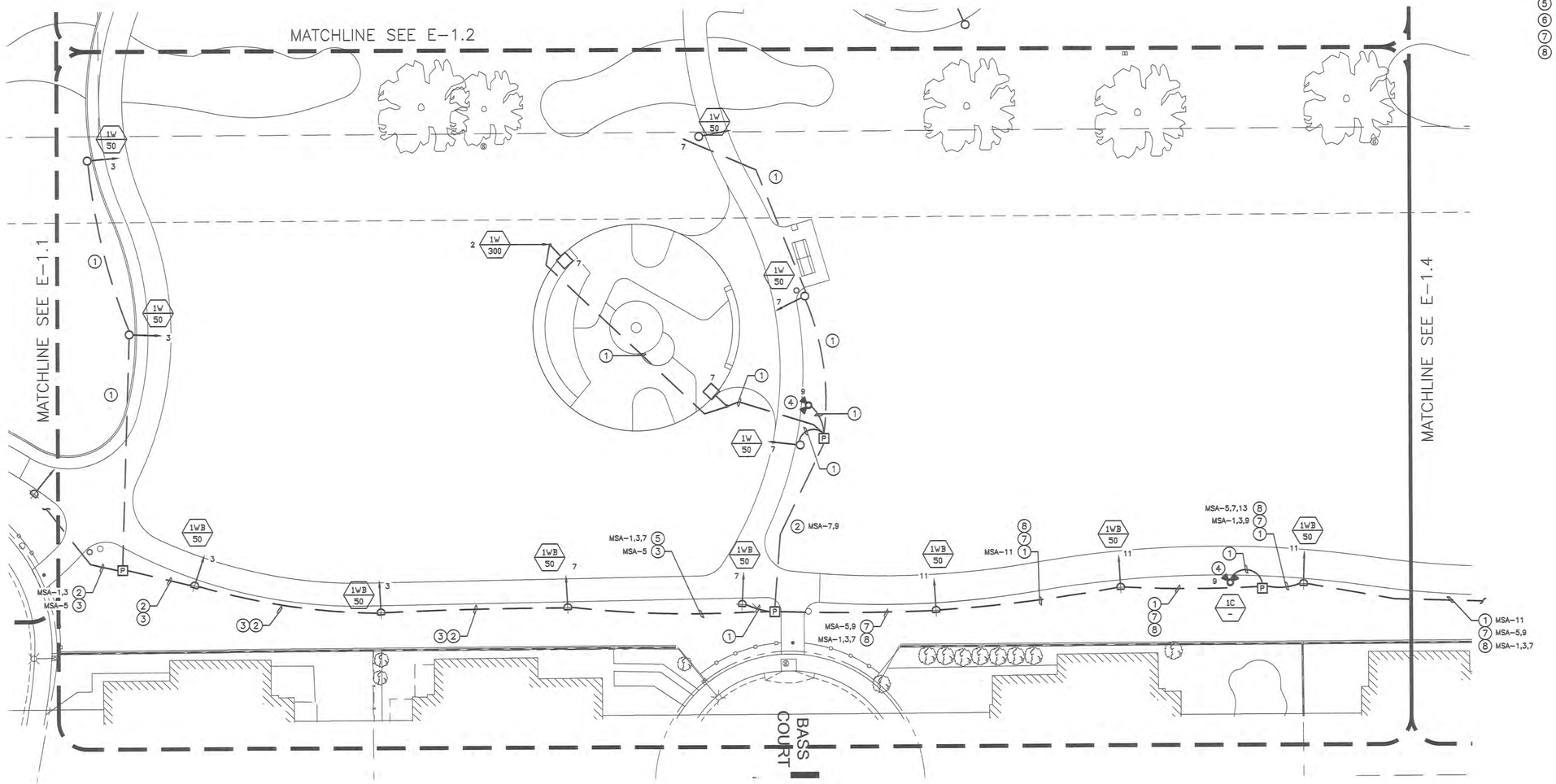

PARTIAL ELECTRICAL SITE PLAN

SCALE 1"=20'-0" (1)

JCA Engineering Inc.
Electrical Engineering & Consulting
8048 Palm Ave
Highland, Ca. 92346
909 864-0223
Fax 909 864-0280
james.corns@jcaeng.com
JOB # 2690
JOB Jamie Corns

DIGALERT
DIAL BEFORE YOU DIG
TWO WORKING DAYS BEFORE YOU DIG
TOLL FREE 1-800-227-2600
A PUBLIC SERVICE BY UNDERGROUND SERVICE ALERT

DATE	BY	MARK	REVISIONS	APPR.	DATE
				CITY	

ENGINEER
DESIGNED BY: GM, AL DRAWN BY: AL CHECKED BY: DG

SEAL: REGISTERED PROFESSIONAL ENGINEER JAMES J ROBERTSON No. E 11795 EXP. 9/30/04 ELECTRICAL STATE OF CALIFORNIA

APPROVED BY: DATE
CITY ENGINEER
R.C.E. NO. EXP. DATE 08.03.2023
PREPARED BY: DATE
LANDSCAPE ARCHITECT
L.L.A NO. EXP. DATE

BENCHMARK
SCALE AS SHOWN
DATE

RHA LANDSCAPE ARCHITECTS PLANNERS, INC.
6800 INDIANA AVENUE, SUITE #245
RIVERSIDE, CA 92506
LIC. #2799
PH. (951) 781-1930
FAX (951) 686-8091

CITY OF PERRIS
COPPER CREEK PARK
PARK IMPROVEMENT PLANS
PARTIAL ELECTRICAL SITE PLAN
FOR CITY OF PERRIS W.O.

SHEET NO. E-1.3
4 OF 9 SHEETS
FILE NO. RHA# 22154

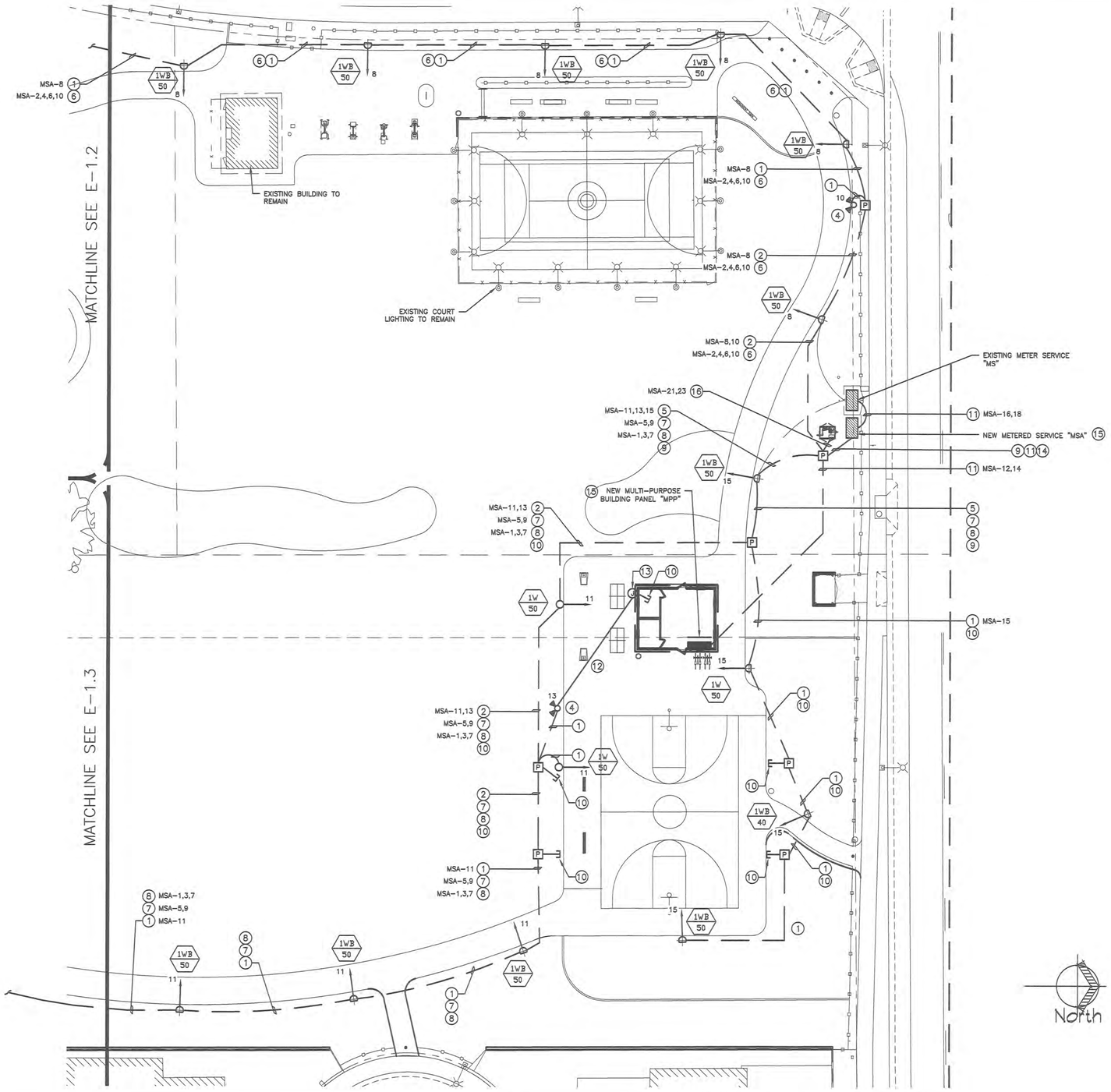

SITE PLAN NOTES:

1. 1"C. 2 #10 & 1 #10 E/G.
2. 1"C. 4 #10 & 1 #10 E/G.
3. NOT USED
4. POLE FOR FUTURE CAMERAS SEE E-3.0 DETAIL #3 COIL UP AND TAPE OFF 24" OF SLACK
5. 1"C. 6 #10 & 1 #10 E/G.
6. 1 1/4"C. 8 #8 & 1 #10 E/G.
7. 1"C. 4 #8 & 1 #10 E/G. ROUTE AROUND POLE BASES
8. 1"C. 6 #8 & 1 #10 E/G. ROUTE AROUND POLE BASES
9. (2) 1 1/4"C.O. ROUTE AROUND POLE BASES
10. 1 1/4"C.O. ROUTE AROUND POLE BASES
11. SEE SINGLE LINE DIAGRAM
12. 1"C.O. STUB-UP IN DATA ROOM OF BUILDING VERIFY EXACT LOCATION PRIOR TO ROUGH-IN.
13. MOUNT TO EXTERIOR WALL ABOVE INTERIOR CEILING LINE.
14. (1) 1"C. 8 #10 & 1 #10 E/G. MSA-1,3,5,7
    (1) 1"C. 8 #10 & 1 #10 E/G. MSA-9,11,13,15
    (1) 1"C. 6 #10 & 1 #10 E/G. MSA-2,4,6
    (1) 1"C. 2 #8 (MSA-21,23), 4 #10 & 1 #10 E/G. MSA-8,10
15. VERIFY EXACT LOCATION PRIOR TO ROUGH-IN.
16. 1"C. 2 #8 & 1 #10 E/G

PARTIAL ELECTRICAL SITE PLAN

SCALE 1"=20'-0" (1)

JCA Engineering Inc.
Electrical Engineering & Consulting
8048 Palm Ave
Highland, Ca.
92346
909 864-0223
Fax 909 864-0280
james.corns@jcaeng.com
Job # 2865
P.R. James Corns

DIGALERT
DIAL BEFORE YOU DIG
TWO WORKING DAYS BEFORE YOU DIG
TOLL FREE 1-800-227-2600
A PUBLIC SERVICE BY UNDERGROUND SERVICE ALERT

DATE	BY	MARK	REVISIONS	APPR.	DATE
				CITY	

ENGINEER
DESIGNED BY: GM, AL DRAWN BY: AL CHECKED BY: DG

SEAL: REGISTERED PROFESSIONAL ENGINEER JOSEPH J. RIGGERO No. E 11795 Exp. 9/30/94 ELECTRICAL STATE OF CALIFORNIA

APPROVED BY: DATE
CITY ENGINEER
R.C.E. NO. EXP. DATE 06-03-2023
PREPARED BY: DATE
LANDSCAPE ARCHITECT
L.L.A NO. EXP. DATE

BENCHMARK
SCALE AS SHOWN
DATE

RHA LANDSCAPE ARCHITECTS PLANNERS, INC
6800 INDIANA AVENUE,
SUITE #245
RIVERSIDE, CA 92506
LIC. #2799
PH. (951) 781-1930
FAX (951) 686-8091

CITY OF PERRIS
COPPER CREEK PARK
PARK IMPROVEMENT PLANS
PARTIAL ELECTRICAL SITE PLAN
FOR CITY OF PERRIS W.O.

SHEET NO. E-1.4
5 OF 9 SHEETS
FILE NO.
RHA# 22154

NOTES:

1. SIZE OF CONDUCTORS SHALL COMPLY WITH C.E.C. TABLE 250
2. PROVIDE SEPARATE BOND CONDUCTORS FROM GROUND ROD TO ELECTRICAL PANEL AND FROM GROUNDING ROD TO METAL BUILDING FRAME (C.E.C. 250). IN ADDITION TO THE DETAIL SHOWN ABOVE, BOND THE ELECTRICAL GROUND TO METAL UNDERGROUND WATER PIPE IN DIRECT CONTACT WITH THE EARTH FOR 10' OR MORE, IF AVAILABLE (C.E.C. 250)
3. ALL MODULES OF THE METAL FRAME BUILDINGS SHALL BE ELECTRICALLY BONDED TOGETHER (BOLTING ONLY IS NOT ACCEPTABLE BONDING).
4. CHECK RESISTANCE OF GROUND. IF RESISTANCE EXCEEDS 25 OHMS INSTALL ADDITIONAL GROUND RODS (C.E.C. 250) AS REQUIRED, CONTRACTOR SHALL DEMONSTRATE TO OWNER OR DSA INSPECTOR THAT RESISTANCE IS 25 OMS OR LESS GROUND. GROUND ROD TESTING SHALL BE PERFORMED IN THE PRESENCE OF THE PROJECT INSPECTOR.

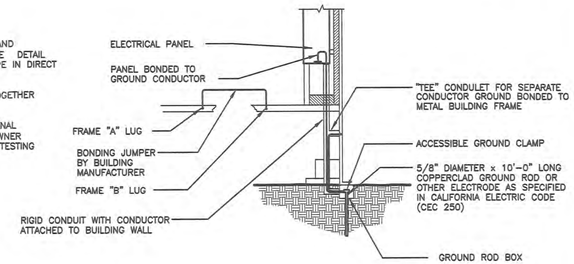

BUILDING GROUNDING DETAIL

SCALE N.T.S. (4)

NEW METERED SERVICE

MSA (B)	LOCATION: EAST END OF SITE MAIN: 400A/2P						BUS RATING 400 AMP			120/240V 1ø 3W MOUNTING: FREE STANDING GEAR
LOCATION	VOLTAMPS #A	VOLTAMPS #B	CIR	BKR	A	B	BKR	CIR	VOLTAMPS #A	VOLTAMPS #B	LOCATION
(C) S. WALKWAY LIGHTS	400		1	20	*		20	2	400		S.W. WALKWAY LIGHTS (C)
S.E. WALKWAY LIGHTS		400	3	20		*	20	4		450	W. WALKWAY LIGHTS
SOUTH CAMERA POLES	600		5	20	*		20	6	400		W. WALKWAY LIGHTS
E. WALKWAY LIGHTS/ SKATE		850	7	20		*	20	8		350	N. WALKWAY LIGHTS
CENTRAL EAST CAMERA POLES	600		9	20	*		20	10	600		CENTRAL WEST CAMERA POLES
N. WALKWAY LIGHTS		400	11	20		*	200/2	12		15550	PANEL "MPP"
NORTH CAMERA POLES	300		13	20	*			14	15550		____
N. WALKWAY LIGHTS		300	15	20		*	150/2	16		8365	(E) SERVICE "MS"
(A) TIME CLOCK	200		17	20	*			18	10225		____
*		–	19	–		*	–	20		–	*
BOOSTER PUMP	3957		21	50/2	*		–	22	–		*
----		3957	23			*	–	24		–	*
	5057	5907	SUB TOTAL						27175	24715	

TOTAL CONNECTED VA	=	63854 VA
LCL: 15664 VA @ 25%	=	3916 VA
TOTAL PANEL LOAD	=	67770 VA
FEEDER AMPS	=	282.6 AMPS

NOTES:
(A) PROVIDE 7-DAY/24-HOUR/365-DAY/FOUR CHANNEL ELECTRONIC TIME SWITCH (120V.)
(B) PROVIDE PHOTOCELL (120V.) AND MOUNT TOP OF GEAR FACING SOUTH W/ 3/4" 3 #12 TO TIME SWITCH
(C) PROVIDE (1) 250V-6P-20A CONTACTOR/COIL (120V) AND (1) 250V-4P-20A CONTACTOR/COIL (120V.) CONNECT TO TIME SWITCH

EXISTING SERVICE

PANEL MS	LOCATION: EAST END OF SITE MAIN: (E) 200A/2P						BUS RATING 200 AMP			120/240V 1ø 3W MOUNTING: FREE STANDING GEAR
LOCATION	VOLTAMPS #A	VOLTAMPS #B	CIR	BKR	A	B	BKR	CIR	VOLTAMPS #A	VOLTAMPS #B	LOCATION
CAMERAS	600		1	20	*		20	2	300		IRRIGATION CONTROL
PHOTO CELL		180	3	20		*	20	4		1000	SITE POLE LIGHTS
TIME SWITCH	300		5	20	*		20	6	1000		SITE POLE LIGHTS
			7			*	20	8		–	
			9		*		100/2	10	3825		RESTROOM SUB-PANEL
			11			*		12		3825	----
			13		*		20	14	2520		TENNIS COURT LTG
			15			*	20	16		1680	TENNIS COURT LTG
			17		*		20	18	1680		TENNIS COURT LTG
			19			*	20	20		1680	TENNIS COURT LTG
			21		*		–	22	–		*
			23			*	–	24		–	*
	900	180	SUB TOTAL						9325	8185	

TOTAL CONNECTED VA	=	18590 VA
LCL: 7560 VA @ 25%	=	1890 VA
TOTAL PANEL LOAD	=	20480 VA
FEEDER AMPS	=	85.4 AMPS

NOTES:
(A) REMOVE EXISTING CONDUCTORS AND LABEL "SPARE" ELECTRONIC TIME SWITCH (120V.)
(B) PROVIDE PHOTOCELL (120V.) AND MOUNT TOP OF GEAR FACING SOUTH W/ 3/4" 3 #12 TO TIME SWITCH
(C) PROVIDE (1) 250V-6P-20A CONTACTOR/COIL (120V) AND (1) 250V-4P-20A CONTACTOR/COIL (120V.) CONNECT TO TIME SWITCH

UTILITY NOTES:

1. ALL UTILITY BACKBONE AND DISTRIBUTION WORK SHALL BE PERFORMED BY A COMPANY WHO IS QUALIFIED TO INSTALL THE INFRASTRUCTURE AND APPROVED BY SOUTHERN CALIFORNIA EDISON. CONTRACTOR SHALL PROVIDE PROOF OF APPROVAL PRIOR TO COMMENCEMENT OF ANY WORK.
2. INSTALLATION OF THE BACKBONE AND INFRASTRUCTURE SYSTEM SHALL BE PER SOUTHERN CALIFORNIA EDISON DRAWING.
3. CONTRACTOR SHALL BE RESPONSIBLE FOR OBTAINING APPROVED DRAWINGS FROM SOUTHERN CALIFORNIA EDISON
4. CONTRACTOR SHALL BE RESPONSIBLE FOR THE COMPLETE COORDINATION/INSTALLATION OF BACKBONE AND DISTRIBUTION INFRASTRUCTURE SYSTEM: PADS, PULLBOXES, CONDUITS, CONDUCTORS, TRENCHING, ENCASEMENT, BACKFILL, COMPACTION, ETC.

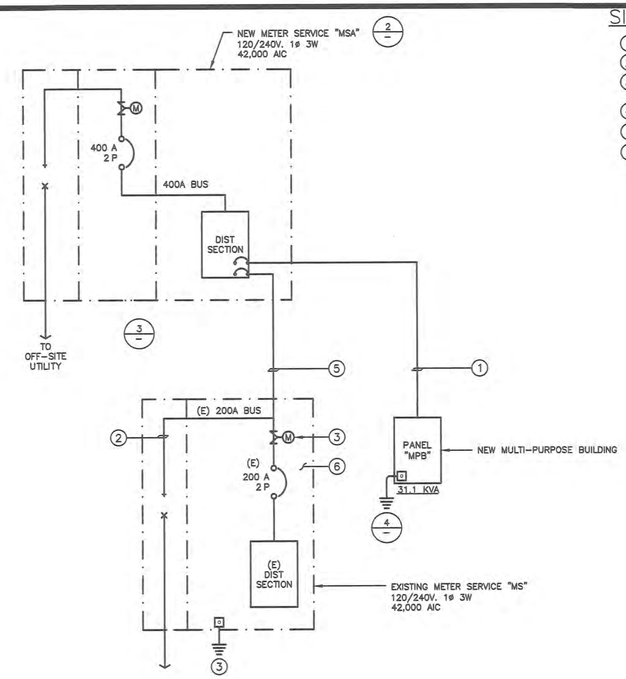

SINGLE LINE NOTES:

1. 2"C. 3 #3/0 & 1 #6 E/G.
2. EXISTING UTILITY CONNECTION TO BE ABANDONED
3. REMOVE EXISTING METER PROVIDE COPPER JUMPERS AND PROVIDE COVER PLATE.
4. DISCONNECT EXISTING NEUTRAL GROUND CONDUCTOR.
5. 2"C. 3 #1/0 & 1 #6 E/G.
6. PROVIDE LABEL ON INTERIOR OF PANEL WHICH READS "150 AMP FEED"

SINGLE LINE DIAGRAM

SCALE N.T.S. (1)

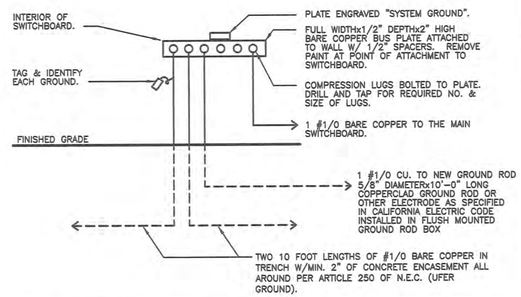

SYSTEM GROUND

SCALE N.T.S. (3)

INSPECTION NOTE:
CONTRACTOR SHALL ARRANGE SPECIAL INSPECTION BY AN INDEPENDANT CERTIFIED TESTING FIRM FOR ANCHOR BOLT INSTALLATION PER IBC 1705.1.1 AND TABLE 1705.3. INCLUDE ALL COST IN BID

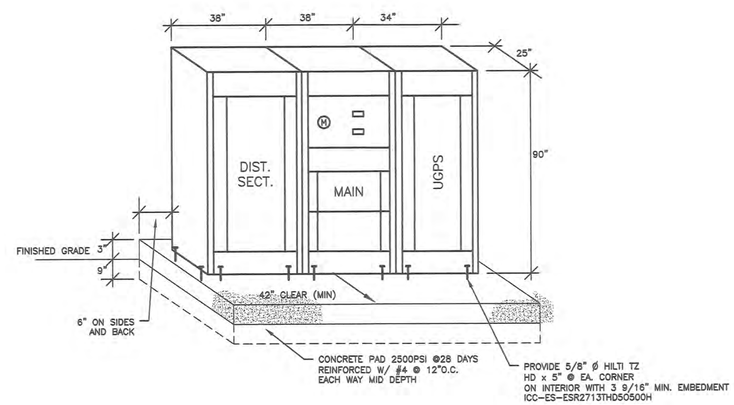

NOTES:

1. PROVIDE 6" DEEP CONCRETE AROUND BASE OF SWITCHBOARD.
2. MAXIMUM OP. WEIGHT = 1000 LBS PER SECTION
3. SHALL BE NEMA 3R ENCLOSURE

METERED SERVICE ELEVATION

SCALE N.T.S. (2)

JCA Engineering Inc.
Electrical Engineering & Consulting
8048 Palm Ave
Highland, Ca. 92346
909 864-0223
Fax 909 864-0280
james.corns@jcaeng.com
Job # 2865
P.N. James Corns

DIGALERT
DIAL BEFORE YOU DIG
TWO WORKING DAYS BEFORE YOU DIG
TOLL FREE 1-800-227-2600
A PUBLIC SERVICE BY UNDERGROUND SERVICE ALERT

DATE	BY	MARK	REVISIONS	APPR.	DATE

ENGINEER — CITY
DESIGNED BY: GM, AL DRAWN BY: AL CHECKED BY: DG

SEAL: REGISTERED PROFESSIONAL ENGINEER JOSEPH J. TOMASELLI No. E 11795 EXP. 9/30/24 ELECTRICAL STATE OF CALIFORNIA

APPROVED BY: DATE
CITY ENGINEER
R.C.E. NO. EXP. DATE 06-03-2023
PREPARED BY: DATE
LANDSCAPE ARCHITECT
L.L.A NO. EXP. DATE

BENCHMARK
SCALE AS SHOWN
DATE

RHA LANDSCAPE ARCHITECTS PLANNERS, INC.
6800 INDIANA AVENUE, SUITE #245
RIVERSIDE, CA 92506
LIC. #2799
PH. (951) 781-1930
FAX (951) 686-8091

CITY OF PERRIS
COPPER CREEK PARK
PARK IMPROVEMENT PLANS
SINGLE LINE DIAGRAM AND DETAILS
FOR CITY OF PERRIS W.O.

SHEET NO. E-2.0
6 OF 9 SHEETS
FILE NO. RHA# 22154

GENERAL NOTES

1. CONTRACTOR SHALL VERIFY EXISTING SITE CONDITIONS, SERVICE REQUIREMENTS AND EXACT LOCATIONS OF SERVICE FACILITIES BEFORE SUBMITTING BID. SUBMITTAL OF BID INDICATES CONTRACTOR ACCEPTS THE CONDITIONS UNDER WHICH HE SHALL BE REQUIRED TO PERFORM HIS WORK.
2. CONSTRUCTION TERMINOLOGY, AND THE STANDARDS OF INSTALLATION REQUIRED BY THESE CONTRACTOR DOCUMENTS ARE BASED ON PUBLISHED STANDARDS OF N.E.C.A. (NATIONAL ELECTRICAL CONTRACTORS ASSOCIATION), NATIONAL ELECTRICAL SAFETY CODE, AMERICAN NATIONAL STANDARDS INSTITUTE DOCUMENTS, NATIONAL ELECTRICAL MANUFACTURERS ASSOCIATION, UNDERWRITERS LABORATORIES, AND THE CALIFORNIA ELECTRICAL CODE. SUBMITTAL OF BID INDICATES THE CONTRACTOR IS FAMILIAR OF THESE STANDARDS AND THE REQUIREMENTS NECESSARY TO PERFORM ALL THE WORK AS SET FORTH IN THESE CONTRACT DOCUMENTS AND ACCEPTS THE CONDITIONS.
3. SHOP DRAWINGS SHALL BE SUBMITTED WITHIN THIRTY DAYS AFTER AWARD OF THE CONTRACT. THE CONTRACTOR SHALL SUBMIT EIGHT COPIES OF A COMPLETE LIST OF MATERIALS AND EQUIPMENT INCLUDING MANUFACTURER AND MODEL NUMBER PROPOSED FOR THE JOB. SHOP DRAWINGS SHALL INCLUDE JOB DESCRIPTION, ARCHITECT AND ENGINEER IDENTIFICATION, AND ALL DATA WITH CAPACITIES, SIZES, DIMENSIONS, CATALOG NUMBERS, MANUFACTURER'S BROCHURES, AND SUPPORT DATA.
4. SUBMIT SHOP DRAWINGS FOR ALL MAJOR PIECES OF ELECTRICAL EQUIPMENT, WHICH INCLUDES, BUT NOT LIMITED TO: SWITCHGEAR, PANEL BOARDS, TRANSFORMERS, LIGHTING FIXTURES, TIME SWITCHES, AND ELECTRICAL PRODUCTS
5. THESE PLANS ARE DIAGRAMMATIC ONLY. FOLLOW AS CLOSELY AS POSSIBLE. REFER TO ARCHITECTURAL DRAWINGS FOR DETAILS, STRUCTURAL DETAILS, EXACT EQUIPMENT AND OUTLET LOCATIONS.
6. ROUTING OF RACEWAYS SHALL BE AT THE OPTION OF THE CONTRACTOR UNLESS OTHERWISE NOTED AND SHALL BE COORDINATED WITH OTHER TRADES.
7. DO NOT SCALE THE ELECTRICAL DRAWINGS FOR LOCATIONS OF ANY ELECTRICAL DEVICES OR EQUIPMENT,
8. CONTRACTOR SHALL PROVIDE ALL J-BOXES, PULL BOXES, ELLS, OFFSETS ETC., FOR A COMPLETE, CODE APPROVED, INSTALLATION OF ALL CONDUIT. FOOTAGE SHOWN ON ELECTRICAL SINGLE LINES AND RISER DIAGRAMS ARE FOR CALCULATION PURPOSES ONLY, AND ARE NOT FOR BIDDING PURPOSES OR MATERIAL TAKEOFF. IT SHALL BE THE RESPONSIBILITY OF THE CONTRACTOR TO REVIEW AND TO COORDINATE WITH MECHANICAL, FIRE PROTECTION, AND PLUMBING DRAWINGS FOR DUCTS, LINES, AND EQUIPMENT.
9. ALL MATERIALS SHALL BE NEW, AND OF THE SAME MANUFACTURER FOR EACH CLASS OR GROUP OF EQUIPMENT. MATERIALS SHALL BE LISTED AND APPROVED BY THE UNDERWRITER'S LABORATORIES FOR THE USE AND ENVIRONMENT, AND SHALL BEAR THE INSPECTION LABEL WHERE SUBJECT TO APPROVAL. MATERIALS SHALL MEET WITH THE APPROVAL OF THE DIVISION OF INDUSTRIAL SAFETY, AND ALL GOVERNING BODIES HAVING JURISDICTION. MATERIALS SHALL BE MANUFACTURED IN ACCORDANCE WITH APPLICABLE STANDARDS ESTABLISHED BY A.N.S.I., U.L., N.E.M.A., AND N.B.F.U. INSTALL PER MANUFACTURER'S RECOMMENDATIONS.
10. CONTRACTOR SHALL PERFORM HIS WORK IN ACCORDANCE WITH ALL GOVERNING STATE, COUNTY, LOCAL CODES, O.S.H.A., THE PRESENTLY ADOPTED NATIONAL ELECTRICAL CODE, AND PRESENTLY ADOPTED CALIFORNIA ELECTRICAL CODE (C.E.C.)
11. COORDINATE WITH OTHER TRADES AS TO THE EXACT LOCATION OF THEIR RESPECTIVE EQUIPMENT. SUPPLY POWER AND MAKE CONNECTIONS TO MOTORS AND EQUIPMENT REQUIRING ELECTRICAL CONNECTIONS AS INDICATED ON THE SINGLE LINE DIAGRAM, ELECTRICAL DRAWINGS, AND DRAWINGS OF OTHER TRADES. REVIEW THE DRAWINGS OF OTHER TRADES FOR CONTROL DIAGRAMS, SIZE AND LOCATION OF EQUIPMENT. DISCONNECT SWITCHES, STARTERS, WIRING, CONTROLS, AND CONDUIT FOR MECHANICAL AND PLUMBING OPERATIONS SHALL BE PROVIDED. THE CONTRACTOR SHALL BE RESPONSIBLE FOR OBTAINING MANUFACTURER'S SHOP DRAWINGS PRIOR TO ROUGH-IN IN ALL CONDUIT TO THIS EQUIPMENT.
12. EXACT METHOD AND LOCATION OF CONDUIT PENETRATION AND OPENING IN CONCRETE WALLS OR FLOORS OR STRUCTURAL STEEL MEMBERS SHALL BE AS DIRECTED BY THE STRUCTURAL ENGINEER. PERFORM CORING, SAW CUTTING, PATCHING, AND REFINISHING OF EXISTING WALLS AND SURFACES WHEREVER IT IS NECESSARY TO PENETRATE. OPENINGS SHALL BE SEALED IN AN APPROVED METHOD TO MEET THE FIRE RATING OF THE PARTICULAR WALL, FLOOR, OR CEILING. EXACT METHOD AND LOCATIONS OF CONDUIT PENETRATIONS AND OPENINGS IN CONCRETE WALLS OR FLOORS SHALL BE U.L. APPROVED.
13. THE CONTRACTOR SHALL BE RESPONSIBLE FOR ALL SAW CUTTING, TRENCHING, BACKFILLING, COMPACTION, AND PATCHING OF CONCRETE AND ASPHALT AS REQUIRED TO PERFORM HIS WORK. ATTENTION IS CALLED TO THE FACT THAT THERE ARE EXISTING UNDERGROUND UTILITY LINES. THE CONTRACTOR SHALL USE EXTREME CAUTION WHEN TRENCHING FOR HIS WORK. THE CONTRACTOR SHALL BE RESPONSIBLE FOR THE PROPER AND APPROVED REPAIR OF ANY AND ALL DAMAGES CAUSED BY HIM OR HIS WORK.
14. ALL CONDUIT SHALL BE INSTALLED CONCEALED WHERE PHYSICALLY POSSIBLE.
15. CONCEALED CONDUIT SHALL BE ELECTRICAL METALLIC TUBING (E.M.T.) WITH COMPRESSION TYPE COUPLERS. SECURED WITH ONE-HOLE PIPE STRAPS.
16. P.V.C. CONDUIT SHALL BE USED UNDERGROUND ONLY, IF APPROVED BY LOCAL CODE. INSTALL PER ALL REQUIRED LOCAL CODES. ALL UNDERGROUND CONDUIT SWEEPS, UNDERGROUND RISERS, AND STUBS ABOVE GRADE SHALL BE I.M.C. WITH HALF-LAPPED TAPE COVERING OR FACTORY INSTALLED P.V.C. COATING. ROUTE ALL UNDERGROUND CONDUITS AROUND PROPOSED BUILDING AND FUTURE BUILDING LOCATIONS.
17. UNDERGROUND CONDUIT INSTALLATION DEPTH SHALL BE PER THE FOLLOWING CURRENT N.E.C.:
    +30" BELOW TURF
    +30" BELOW 2" CONCRETE AND ASPHALT
    +30" BELOW 4" NON VEHICLE CONCRETE OR ASPHALT
    +30" BELOW STREETS, HIGHWAYS, ALLEYS, DRIVEWAYS OR PARKING LOTS
18. ALL CONDUIT ONLY (C.O.) SHALL HAVE A 3/16" PULL WIRE OR ROPE, MINIMUM.
19. CONDUIT SHOWN AS EXPOSED OR APPROVED FOR EXTERIOR EXPOSED INSTALLATION SHALL BE INTERMEDIATE METALLIC CONDUIT (I.M.C.). SECURED WITH TWO-HOLE MALLEABLE PIPE STRAPS AND SCREWS. ALL BOXES AND FITTINGS SHALL BE SUPPORTED AND SECURED IN COMPLIANCE WITH C.E.C. ARTICLE 370.
20. CONDUIT SHOWN AS EXPOSED OR APPROVED FOR INTERIOR EXPOSED INSTALLATION, IN NON-PUBLIC AREAS, SHALL BE E.M.T. INSTALLED IN PARALLEL OR IN RIGHT ANGLES WITH ALL REQUIRED MOUNTING ACCESSORIES.
21. PENETRATIONS TO FIRE-RATED MATERIALS SHALL BE RESTORED TO EQUAL RATING AS REQUIRED BY THE STATE FIRE MARSHAL AND ALL OTHER GOVERNING BODIES.
22. ALL CONDUCTORS OF EVERY SYSTEM SHALL BE PERMANENTLY TAGGED IN COMPLIANCE WITH O.S.H.A.
23. THE COMPLETE ELECTRICAL SYSTEM SHALL BE GROUNDED IN ACCORDANCE WITH THE PRESENTLY ADOPTED EDITION OF THE C.E.C., ARTICLE #250.
24. CONDUCTORS SHALL BE CODE GRADE, 600 VOLT CLASS, COPPER, MARKED 24" ALONG IT'S LENGTH SHOWING MANUFACTURER'S NAME, MAXIMUM ALLOWABLE VOLTAGE AND SIZE. CONDUCTORS SHALL BE TYPE "THWN" (WET) OR "THHN" (DRY). DELIVER CONDUCTORS TO THE JOB SITE IN UNBROKEN PACKAGES.
25. CONTRACTOR SHALL FURNISH AND INSTALL ALL CONDUIT, CONTROL WIRES, AND OUTLETS FOR COMPLETE CONNECTION TO MECHANICAL EQUIPMENT. REFER TO MECHANICAL DRAWINGS FOR CONTROL SCHEMATICS.
26. THE EXACT LOCATION OF ALL ELECTRICAL DEVICES AND EQUIPMENT SHALL BE COORDINATED WITH THE ARCHITECTURAL AND INTERIOR DESIGN ELEVATIONS, DETAILS, OR SECTIONS PRIOR TO INSTALLATION. ALL ELECTRICAL DEVICES AND EQUIPMENT SHALL BE RECESSED IN WALLS UNLESS OTHERWISE NOTED
27. REVIEW ARCHITECTURAL AND INTERIOR DESIGN ELEVATIONS OF CASEWORK. OUTLETS MOUNTED ABOVE, BELOW, OR ADJACENT TO CASEWORK SHALL BE COORDINATED WITH THE ARCHITECTURAL DRAWINGS, PRIOR TO FINAL ROUGH-IN. ELECTRICAL DRAWINGS SHALL GOVERN NUMBER AND TYPE OF OUTLETS. PROVIDE CONDUIT, WIRES, AND OUTLETS FOR WORK REQUIRED IN CASEWORK INSTALLATIONS. THE CONTRACTOR SHALL BE RESPONSIBLE FOR CUT-OUTS IN TILE WHERE ELECTRICAL DEVICES OCCUR. PROVIDE BOX EXTENSIONS THROUGH ALL CASEWORK. FINISH FLUSH WITH FACE OF CABINET, ETC.
28. ARCHITECTURAL AND INTERIOR DESIGN REFLECTED CEILING PLANS INDICATING THE LOCATION OF LIGHTING FIXTURES SHALL TAKE PRECEDENCE OVER THE LOCATIONS OF SAME AS SHOWN ON THE ELECTRICAL DRAWINGS. INSTALL THE LIGHTING FIXTURES IN ANY GIVEN AREA TO AGREE WITH THE REFLECTED CEILING PLANS. DISCREPANCIES SHALL BE BROUGHT TO THE ATTENTION OF THE ARCHITECT.
29. IT SHALL BE THE CONTRACTORS RESPONSIBILITY TO VERIFY TYPE OF CEILING SYSTEMS AND TO FURNISH APPROVED LIGHTING FIXTURES OF THE TYPE REQUIRED FOR MOUNTING IN SUBJECT CEILING. WHERE FIXTURES ARE RECESSED IN PLASTER OR DRYWALL CEILINGS, THEY SHALL BE COMPLETE WITH NECESSARY MOUNTING HARDWARE AND PLASTER FRAMES.
30. PROVIDE ALL HANGERS, CLIPS, SEISMIC SUPPORTS, LENSES, ETC. PER ALL REQUIRED CODES FOR A COMPLETE LIGHTING FIXTURE.
31. ALL RECESSED LIGHTING FIXTURES, SPEAKERS, RECEPTACLES, SWITCHES, ETC., MOUNTED IN FIRE RATED CEILINGS OR WALLS SHALL BE ENCLOSED WITH AN APPROVED ENCLOSURE CARRYING THE SAME FIRE RATING AS THE CEILING OR WALL.
32. PROVIDE THE OWNER WITH ONE (1) SET OF COMPLETE, UP TO DATE, "AS-BUILT" REPRODUCIBLE DRAWINGS AT THE COMPLETION OF THE PROJECT, SHOWING ACTUAL DEPTHS OF UNDERGROUND CONDUIT RUNS AT ALL LOCATIONS. ALL BROCHURES, OPERATING MANUALS, CATALOGS, SHOP DRAWINGS, ETC. SHALL BE TURNED OVER TO THE OWNER AT PROJECT COMPLETION.
33. THE COMPLETE PROJECT SHALL BE GUARANTEED FOR A PERIOD OF ONE (1) YEAR, AFTER DATE OF ACCEPTANCE, BY OWNER. ANY WORK, MATERIAL OR EQUIPMENT FOUND TO BE FAULTY DURING THAT PERIOD SHALL BE CORRECTED IN A TIMELY MANNER, UPON WRITTEN NOTIFICATION, AT THE EXPENSE OF THE ELECTRICAL CONTRACTOR.
34. WHERE A CONFLICT OCCURS BETWEEN THESE NOTES, THE ELECTRICAL DRAWINGS OR THE ELECTRICAL SPECIFICATIONS ISSUED AS A PART OF THESE DOCUMENTS, THE MORE STRINGENT REQUIREMENT SHALL PREVAIL.
35. PANEL BOARDS SHALL BE COPPER "BOLT-ON" TYPE. COMPONENTS AND FEATURES SHALL BE IN STRICT ACCORDANCE WITH THE SERVING UTILITIES, CODE ENFORCING AGENCY, ELECTRICAL DRAWINGS, AND MAIN SERVICE MANUFACTURER AND OPERATING CHARACTERISTICS.
36. PROVIDE ENGRAVED PLASTIC NAMEPLATES FOR ALL SWITCHBOARDS, PANEL BOARDS, LOAD CENTERS, TRANSFORMERS, AND TERMINAL CABINETS. PLATES SHALL BE 3 PLY, BLACK FACE, WHITE CORE, WITH ¼" HIGH GOTHIC LETTERING.
37. PROVIDE MAIN UNDERGROUND PULL SECTION, METERING, MAIN DISCONNECT DEVICE, AND DISTRIBUTION SECTION(S) WITH RATINGS, COMPONENTS, AND FEATURES IN STRICT ACCORDANCE WITH THE SERVING UTILITIES AND CODE ENFORCING AGENCY, ELECTRICAL DRAWINGS AND SPECIFICATIONS. THE MAIN SWITCHBOARD AND DISTRIBUTION PANELS CONSIST OF A COMPLETELY ENCLOSED SELF-SUPPORTING, FLOOR STANDING STRUCTURE, OF THE REQUIRED NUMBER OF FORMED VERTICAL PANEL SECTIONS. PROVIDE BOLTED FRAMES AND INSULATING BLOCK TO SUPPORT THE MAIN HORIZONTAL BUS FOR SHORT CIRCUIT STRESS AS INDICATED ON THE DRAWINGS. ALL BUSSING SHALL BE 100% RATED MADE WITH COPPER HAVING A CURRENT DENSITY OF 1,000 AMPS PER SQUARE INCH, PROVIDED WITH SILVER PLATED BUS CONNECTIONS. PROVIDE A ¼ INCH THICK BY 2 INCH HIGH BY FULL LENGTH GROUND BUS WITHIN 12 INCHES OF NEUTRAL BUS AND CONNECT WITH A REMOVABLE LINK (CONNECTED IF SHOWN ON SINGLE LINE DIAGRAM). BOLT ALL FASTENING BETWEEN VERTICAL PANEL SECTIONS TO PROVIDE FLEXIBILITY DURING INSTALLATION. VENTILATED ENCLOSURE WITH NEMA 3R EXTERIOR ENCLOSURE IF REQUIRED, SHALL BE RUST PROOF PRIOR TO PAINTING 2 COATS OF GREY ENAMEL.
38. HAND THE OWNER ONE SPARE SET OF EACH SIZE AND TYPE OF FUSE INSTALLED ON THIS PROJECT.

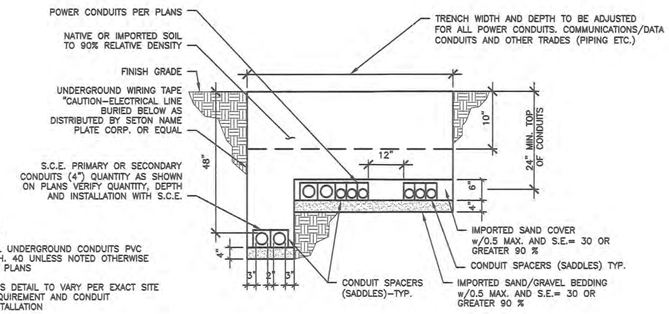

NOTES:

1. ALL UNDERGROUND CONDUITS PVC SCH. 40 UNLESS NOTED OTHERWISE ON PLANS
2. THIS DETAIL TO VARY PER EXACT SITE REQUIREMENT AND CONDUIT INSTALLATION

TRENCH DETAIL

SCALE N.T.S. (2)

ELECTRICAL SYMBOLS LIST

- POST TOP L.E.D. AREA SECURITY FIXTURE – REFER TO FIXTURE SCHEDULE
- POST TOP L.E.D. AREA SECURITY FIXTURE W/ BACKSIDE SHIELD – REFER TO FIXTURE SCHEDULE
- POLE MOUNTED L.E.D. SKATE PARK FIXTURE W/ TYPE FOUR DISTRIBUTION – REFER TO FIXTURE SCHEDULE.
- POLE MOUNTED SECURITY CAMERA(S)
- FLUSH MOUNTED ELECTRICAL PANELBOARD OR LOAD CENTER. REFER TO PANEL SCHEDULE.
- DISTRIBUTION SWITCHBOARD REFER TO SINGLE LINE DIAGRAM.
- GROUND CONNECTION, SIZE AS INDICATED OR AS REQUIRED.
- J — JUNCTION BOX, ACCESSIBLE AND MOUNTED FOR THE APPLICATION DENOTED ON PLANS.
- P — CONCRETE PULLBOX W/BOLT ON LID, SIZED PER N.E.C.
- CONDUIT RUN CONCEALED, IN WALLS, FLOOR, OR ABOVE CEILING.
- CONDUIT RUN CONCEALED BELOW GRADE, 3/4"C MINIMUM.
- CONDUIT RUN EXPOSED TO WALL W/ ALL REQUIRED MOUNTING ACCESSORIES
- CONDUIT STUB OUT, CAP & MARK.
- 1F / 1800 — LIGHT FIXTURE CALL OUT, "1F" INDICATES FIXTURE TYPE (REFER TO FIXTURE SCHEDULE), "1080" INDICATES TOTAL FIXTURE WATTAGE.
- 3 / E-1 — DETAIL CALLOUT, "3" INDICATES DETAIL NUMBER "E-1" INDICATES SHEET NUMBER.
- 2 — PLAN NOTE REFERENCE.
- 4 — REVISION REFERENCE.

CO	CONDUIT ONLY, WITH PULL ROPE.
MH	MOUNTING HEIGHT
WP	WEATHERPROOF, NEMA 3R
PROVIDE	FURNISH, INSTALLED AND CONNECTED, COMPLETE.
GFCI	GROUND FAULT CIRCUIT INTERRUPTER
C	CONDUIT
OFCI	OWNER FURNISHED, CONTRACTOR INSTALLED.
ADA	AMERICANS WITH DISABILITY ACT
E/G	EQUIPMENT GROUND (GREEN)

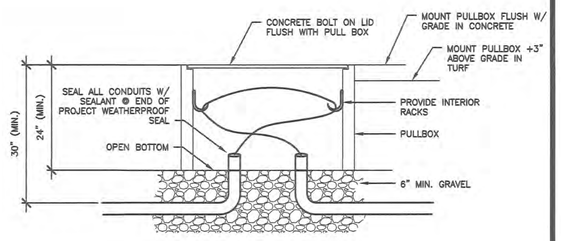

PULLBOX DETAIL

SCALE N.T.S. (1)

JCA Engineering Inc.
Electrical Engineering & Consulting
8048 Palm Ave
Highland, Ca. 92346
909 864-0223
Fax 909 864-0280
james.corns@jcaeng.com
JOB # 2865
P.R. James Corns

DIGALERT — DIAL BEFORE YOU DIG — TWO WORKING DAYS BEFORE YOU DIG — TOLL FREE 1-800-227-2600 — A PUBLIC SERVICE BY UNDERGROUND SERVICE ALERT

DATE	BY	MARK	REVISIONS	APPR.	DATE

ENGINEER — CITY

DESIGNED BY: GM, AL — DRAWN BY: AL — CHECKED BY: DG

SEAL: REGISTERED PROFESSIONAL ENGINEER — JOSEPH J. RUSSO — No. E 11795 — EXP. 9/30/24 — ELECTRICAL — STATE OF CALIFORNIA

APPROVED BY: _____ DATE _____
CONTRACT CITY ENGINEER
R.C.E. NO. _____ EXP. DATE 06.03.2023

PREPARED BY: _____ DATE _____
LANDSCAPE ARCHITECT
L.L.A NO. _____ EXP. DATE _____

BENCHMARK

SCALE AS SHOWN

DATE

RHA LANDSCAPE ARCHITECTS PLANNERS INC.
6800 INDIANA AVENUE, SUITE #245
RIVERSIDE, CA 92506
LIC. #2799
PH. (951) 781-1930
FAX (951) 686-8091

CITY OF PERRIS
COPPER CREEK PARK
PARK IMPROVEMENT PLANS
ELECTRICAL SYMBOL LIST AND GENERAL NOTES

FOR CITY OF PERRIS — W.O.

SHEET NO. **E-2.1**
7 OF 9 SHEETS
FILE NO. RHA# 22154

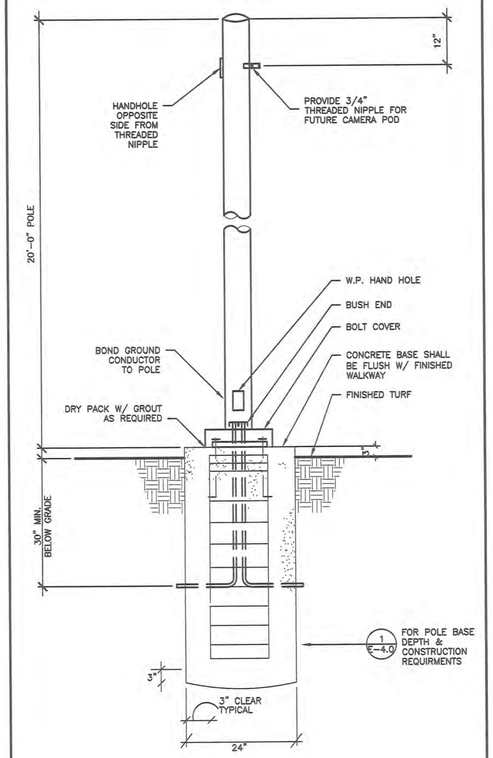

NOTE:
VERIFY BOLT PLACEMENT W/ POLE MANUFACTURER PRIOR TO ROUGH-IN.

CAMERA POLE | SCALE N.T.S. | 3

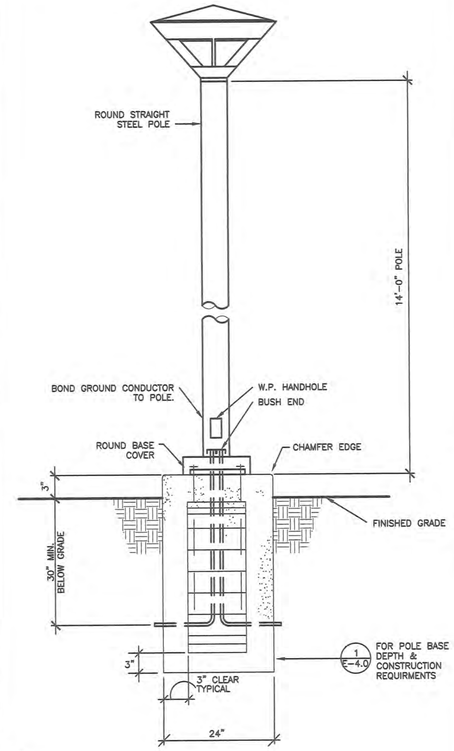

NOTE:
VERIFY BOLT PLACEMENT W/ POLE MANUFACTURER PRIOR TO ROUGH-IN.

WALKWAY LIGHT | SCALE N.T.S. | 2

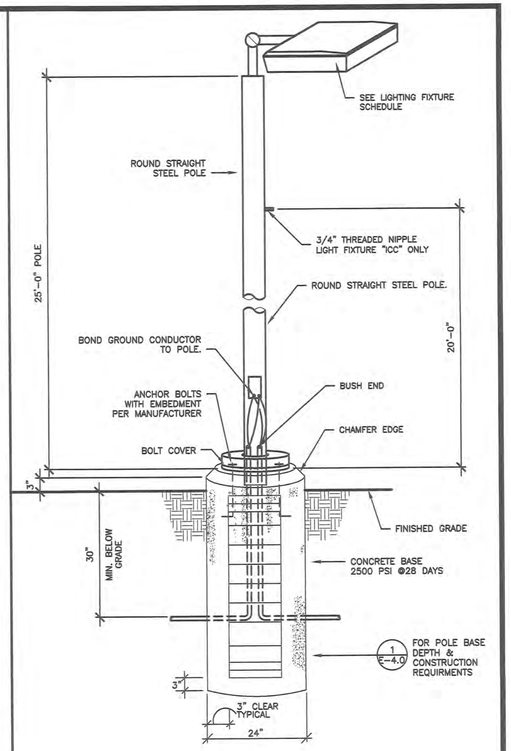

NOTE:
VERIFY BOLT PLACEMENT W/ POLE MANUFACTURER PRIOR TO ROUGH-IN.

SKATE PARK LIGHT | SCALE N.T.S. | 1

LIGHTING FIXTURE SCHEDULE

REFER TO DIVISION 1, GENERAL REQUIREMENTS, REGARDING PRODUCT OPTIONS AND SUBSTITUTION. WHERE THREE OR MORE MANUFACTURERS ARE LISTED IN THE FOLLOWING LIGHTING FIXTURE SCHEDULE, SUBSTITUTION WILL NOT BE CONSIDERED. WHERE PRODUCTS ARE LISTED BY NAMING ONE OR MORE MANUFACTURERS, WITHOUT "OR EQUAL" PROVISION FOR SUBSTITUTION, CONTRACTOR SHALL INCLUDE ONLY SPECIFIED PRODUCTS IN BID. REQUEST FOR SUBSTITUTION WITHIN 35 DAYS FROM THE DATE OF THE NOTICE TO PROCEED WILL ONLY BE CONSIDERED IN ACCORDANCE WITH DIVISION 1 OF THESE CONTRACT DOCUMENTS.

	DESCRIPTION	ILLUMINATION WATTS	ILLUMINATION TYPE	VOLTS	MANUFACTURER	CATALOG #	COMMENTS	
1C –	SECURITY CAMERA POLE WITH 3/4" THREADED NIPPLE AND HAND HOLE AT +19'-0" ON POLE	–	–	–	PACIFIC LIGHTING STANDARDS:	RSS-7-420-3/4" THREADED NIPPLE-19'-XX-BCU [1]	20'-0" A.F.G.	3 –
1S 300	SINGLE HEAD L.E.D. SKATE PARK FIXTURE W/ TYPE FORWARD THROW DISTRIBUTION.	300	L.E.D. 4000K	120	EVERLAST LIGHTING LYTE POLE	EL-ENR14-L1-300-UL-840-IV-KSF/BLFC POLE: 401-5011-25-T2-XX-ABS-BC [1]	25'-3" A.F.G. [2]	1 –
1W 50	POST TOP HIGH ABUSE L.E.D. WALKWAY AREA FIXTURE W/ TYPE THREE DISTRIBUTION AND INTERNAL MOTION SENSOR	50	LED 3000K	120	PACIFIC LIGHTING STANDARDS:	EAA-38-EXLED-MT-7-3-III-MS-PT-RSS-11-414-XX-BCU [1]	POLE @15'-0" A.F.G.	2 –
1WB 50	POST TOP HIGH ABUSE L.E.D. WALKWAY AREA FIXTURE W/ TYPE THREE DISTRIBUTION, INTERNAL MOTION SENSOR AND BACK SIDE SHEILD	50	LED 3000K	120	PACIFIC LIGHTING STANDARDS:	EAA-38-EXLED-MT-7-3-III-MS-PT-RSS-11-413-XX-BCU-HS [1]	POLE @15'-0" A.F.G.	2 –
2W 50	POST TOP HIGH ABUSE L.E.D. WALKWAY AREA FIXTURE W/ TYPE FIVE DISTRIBUTION AND INTERNAL MOTION SENSOR	50	LED 3000K	120	PACIFIC LIGHTING STANDARDS:	EAA-38-EXLED-MT-7-3-V-MS-PT-RSS-11-414-XX-BCU [1]	POLE @15'-0" A.F.G.	2 –

NOTES:

1. COLOR BY OWNER
2. AIM FOR BEST COVERAGE AFTER INSTALLATION
3. VERIFY EXACT LOCATION PRIOR TO ROUGH-IN
4. ADJUST MOUNTING DEPTH AND ANGLE FOR BEST COVERAGE DURING ROUGH-IN

JCA Engineering Inc.
Electrical Engineering & Consulting
8048 Palm Ave
Highland, Ca. 92346
909 864-0223
Fax 909 864-0280
james.corns@jcaeng.com
JOB # 2006-16
JOB # James Corns

DIGALERT
DIAL BEFORE YOU DIG
TWO WORKING DAYS BEFORE YOU DIG
TOLL FREE 1-800-227-2600
A PUBLIC SERVICE BY UNDERGROUND SERVICE ALERT

DATE	BY	MARK	REVISIONS	APPR.	DATE

ENGINEER | CITY
DESIGNED BY: GM, AL DRAWN BY: AL CHECKED BY: DG

SEAL
REGISTERED PROFESSIONAL ENGINEER JOSEPH J. BORNACHEA No. E 11795 EXP. 9/30/24 ELECTRICAL STATE OF CALIFORNIA

APPROVED BY: DATE
CONSTRUCTION CITY ENGINEER
R.C.E. NO. EXP. DATE 08.03.2023
PREPARED BY: DATE
LANDSCAPE ARCHITECT
L.L.A NO. EXP. DATE

BENCHMARK
SCALE AS SHOWN
DATE

RHA LANDSCAPE ARCHITECTS PLANNERS, INC.
6800 INDIANA AVENUE, SUITE #245
RIVERSIDE, CA 92506
LIC. #2799
PH. (951) 781-1930
FAX (951) 686-8091

CITY OF PERRIS
COPPER CREEK PARK
PARK IMPROVEMENT PLANS
LIGHTING FIXTURE SCHEDULE AND DETAILS
FOR CITY OF PERRIS | W.O.

SHEET NO. E-3.0
8 OF 9 SHEETS
FILE NO. RHA# 22154

CONCRETE EXPOSURE REQUIREMENTS

ACI 318 TABLE 4.2.1 - EXPOSURE CATEGORIES AND CLASSES

CATEGORY	SEVERITY	CLASS	CONDITION	
F FREEZING AND THAWING	NOT APPLICABLE	F0	CONCRETE NOT EXPOSED TO FREEZING AND THAWING CYCLES	
	MODERATE	F1	CONCRETE EXPOSED TO FREEZING AND THAWING CYCLES AND OCCASIONAL EXPOSURE TO MOISTURE	
	SEVERE	F2	CONCRETE EXPOSED TO FREEZING AND THAWING CYCLES AND IN CONTINUOUS CONTACT W/ MOISTURE	
	VERY SEVERE	F3	CONCRETE EXPOSED TO FREEZING AND THAWING AND IN CONTINUOUS CONTACT W/ MOISTURE AND EXPOSED TO DEICING CHEMICALS	
S SULFATE			WATER SOLUBLE SULFATE (SO_4) IN SOIL, PERCENT BY WEIGHT	DISSOLVED SULFATE (SO_4) IN WATER, PPM
	NOT APPLICABLE	S0	$SO_4 < 0.10$	$SO_4 < 150$
	MODERATE	S1	$0.10 \leq SO_4 < 0.20$	$150 \leq SO_4 < 1500$ SEAWATER
	SEVERE	S2	$0.20 \leq SO_4 \leq 2.0$	$1500 \leq SO_4 \leq 10,000$
	VERY SEVERE	S3	$SO_4 > 2.00$	$SO_4 > 10,000$
P REQUIRED LOW PERMEABILITY	NOT APPLICABLE	P0	IN CONTACT W/ WATER WHERE LOW PERMEABILITY IS NOT REQUIRED	
	REQUIRED	P1	IN CONTACT W/ WATER WHERE LOW PERMEABILITY IS REQUIRED	
C CORROSION PROTECTION OF REINFORCEMENT	NOT APPLICABLE	C0	CONCRETE DRY OR PROTECTED FROM MOISTURE	
	MODERATE	C1	CONCRETE EXPOSED TO MOISTURE BUT NOT TO EXTERNAL SOURCES OF CHLORIDE	
	SEVERE	C2	CONCRETE EXPOSED TO MOISTURE AND AN EXTERNAL SOURCE OF CHLORIDES FROM DEICING CHEMICALS, SALT, BRACKISH WATER, SEAWATER, OR SPRAY FROM THESE SOURCES	

ACI 318 TABLE 4.3.1 - REQUIREMENTS FOR CONCRETE BY EXPOSURE CLASS

EXPOSURE CLASS	MAX W/C	MIN f'c	ADDITIONAL MINIMUM REQUIREMENTS			
			AIR CONTENT			LIMITS ON CEMENTITIOUS MATERIALS
F0	N/A	2500	N/A			N/A
F1	0.45	4500	PER TABLE 4.4.1 - ACI 318-08			N/A
F2	0.45	4500	PER TABLE 4.4.1 - ACI 318-08			N/A
F3	0.45	4500	PER TABLE 4.4.1 - ACI 318-08			PER TABLE 4.4.2 - ACI 318-08
			CEMENTITIOUS MATERIALS - TYPES			CALCIUM CHLORIDE ADMIXTURE
			ASTM C150	ASTM C595	ASTM C1157	
S0	N/A	2500	NO TYPE RESTRICTION	NO TYPE RESTRICTION	NO TYPE RESTRICTION	NO RESTRICTION
S1	0.50	4000	II [a,c]	IP (MS) IS(<70) (MS)	MS	NO RESTRICTION
S2	0.45	4500	V [b]	IP (HS) IS(<70) (HS)	HS	NOT PERMITTED
S3	0.45	4500	V PLUS POZZOLAN OR SLAG [d]	IP (HS) PLUS POZZOLAN OR SLAG [d] OR IS (<70) (HS) PLUS POZZOLAN OR SLAG [d]	HS PLUS POZZOLAN OR SLAG [d]	NOT PERMITTED
P0	N/A	2500	NONE			
P1	0.50	4000	NONE			
			MAXIMUM WATER SOLUBLE CHLORIDE ION (CL^-) CONTENT IN CONCRETE, PERCENT BY WEIGHT OF CEMENT [e]			RELATED PROVISIONS
			REINFORCED CONCRETE	PRESTRESSED CONCRETE		
C0	N/A	2500	1.00	0.06		NONE
C1	N/A	2500	0.30	0.06		
C2	0.40	5000	0.15	0.06		ACI 318, 7.7.6 & 18.16 [e]

1. ALTERNATIVE COMBINATIONS OF CEMENTITIOUS MATERIALS OF THOSE LISTED IN TABLE 4.3.1 SHALL BE PERMITTED WHEN TESTED FOR SULFATE RESISTANCE AND MEETING THE CRITERIA IN 4.5.1.
2. FOR SEAWATER EXPOSURE, OTHER TYPES OF PORTLAND CEMENTS WITH TRICALCIUM ALUMI-NATE (C3A) CONTENTS UP TO 10 PERCENT ARE PERMITTED IS THE W/ CM DOES NOT EXCEED 0.40.
3. OTHER AVAILABLE TYPES OF CEMENT SUCH AS TYPE III OR TYPE I ARE PERMITTED IN EXPOSURE CLASSES S1 OR S2 IF THE C3A CONTENTS ARE LESS THAN 8 OR 5 PERCENT, RESPECTIVELY.
4. THE AMOUNT OF THE SPECIFIC SOURCE OF THE POZZOLAN OR SLAG TO BE USED SHALL NOT BE LESS THAN THE AMOUNT THAT HAS BEEN DETERMINED BY SERVICE RECORD TO IMPROVE SULFATE RESISTANCE WHEN USED IN CONCRETE CONTAINING TYPE V CEMENT. ALTERNATIVELY, THE AMOUNT OF THE SPECIFIC SOURCE OF THE POZZOLAN OR SLAG TO BE USED SHALL NOT BE LESS THAN THE AMOUNT TESTED IN ACCORDANCE WITH ASTM C1012 AND MEETING THE CRITERIA IN 4.5.1.
5. WATER-SOLUBLE CHLORIDE ION CONTENT THAT IS CONTRIBUTED FROM THE INGREDIENTS INCLUDING WATER, AGGREGATES, CEMENTITIOUS MATERIALS, AND ADMIXTURES SHALL BE DETERMINED ON THE CONCRETE MIXTURE BY ASTM C1218 AT AGE BETWEEN 28 AND 42 DAYS.
6. REQUIREMENTS OF 7.7.6 SHALL BE SATISFIED. SEE 18.16 FOR UNBONDED TENDONS.

CONCRETE

1. CONCRETE COMPRESSIVE STRENGTH: ALL CONCRETE SHALL ATTAIN A MINIMUM COMPRESSIVE STRENGTH AS SHOWN IN THE TABLE 2 BELOW AT 28 DAYS, U.N.O. ON PLANS. SEE ALSO SULFATE CONTENT NOTES.
2. AGGREGATES IN CONCRETE: SHALL BE NATURAL SAND AND ROCK (150 LB/CU. FT) CONFORMING TO ASTM C33. AGGREGATE SHALL HAVE PROVEN SHRINKAGE CHARACTERISTICS OF LESS THAN 0.04% PER ASTM C-157. DO NOT CHANGE SOURCE OF AGGREGATE DURING COURSE OF WORK WITHOUT WRITTEN CONSENT OF ENGINEER.
3. CEMENT: SHALL BE PORTLAND CEMENT CONFORMING TO ASTM C150. CEMENT SHALL BE TYPE II OR AS REQUIRED TO SATISFY SITE SOIL CONDITIONS. REFER TO TABLE 4 FOR CONCRETE CEMENT REQUIREMENTS ON SOIL CONTAINING SULFATE. REFER TO TABLE 2 FOR MAXIMUM WATER TO CEMENT RATIO. USE A MINIMUM OF (6) STACKS OF CEMENT PER CUBIC YARD OF CONCRETE.

CONCRETE STRENGTH

CONDITION	STRENGTH, f'c	WATER / CEMENT RATIO	MAX. SLUMP
FOOTING & GRADE BM	2,500 PSI	PER MIX DESIGNER	PER MIX DESIGNER

REBAR CLEAR COVER FOR CAST-IN-PLACE CONCRETE

CONDITION	COVER
SLAB ON GRADE	CENTER OF SLAB OR 2" MIN
CONCRETE AGAINST & PERMANENTLY EXPOSED TO EARTH:	3"
CONCRETE EXPOSED TO EARTH OR WEATHER:	
WALL PANELS, SLABS, JOINTS:	1"
OTHER MEMBERS:	1 $\frac{1}{2}$"
CONCRETE NOT EXPOSED TO EARTH OR WEATHER:	
SLABS, WALLS, JOINTS:	$\frac{3}{4}$"
BEAM, COLUMNS PRIMARY REINFORCEMENT:	1 $\frac{1}{2}$"
BEAM, COLUMNS TIES, STIRRUPS, SPIRALS	1"

PROJECT DESIGN CRITERIA

BUILDING CODE:	2022 CALIFORNIA BUILDING CODE
LOCATION (LATITUDE / LONGITUDE):	33.808253° N / -117.221231° W
OCCUPANCY CATEGORY:	II
GEOTECHNICAL PARAMETERS:	
SOILS ENGINEER:	NOT PROVIDED
REPORT NUMBER:	-
DATE:	-
ALLOWABLE SOIL BEARING PRESSURE:	1,500 PSF (PRESUMPTIVE)
ALLOWABLE PASSIVE PRESSURE:	200 PSF (PRESUMPTIVE)
EXPANSION INDEX:	--
PLASTICITY INDEX:	--
LIQUEFACTION POTENTIAL:	--
LATERAL SPREADING POTENTIAL:	--
DIFFERENTIAL SETTLEMENT POTENTIAL:	--
CORROSIVITY:	--
SULFATE CONTENT:	--
SEISMIC DESIGN PARAMETERS:	
SITE CLASS:	D-DEFAULT
SHORT PERIOD SPECTRAL ACCELERATION, Ss:	1.483g
1s PERIOD SPECTRAL ACCELERATION, S1:	0.552g
SEISMIC DESIGN CATEGORY:	D
SEISMIC IMPORTANCE FACTOR, Ie:	1.0
WIND DESIGN PARAMETERS:	
BASIC DESIGN SPEED (3s GUST), V:	96 mph
ALLOWABLE STRESS DESIGN WIND SPEED, V_{ASD}:	74 mph
EXPOSURE CATEGORY:	C
WIND IMPORTANCE FACTOR, Iw:	1.0

REINFORCING STEEL

1. REINFORCING STEEL:
   A. ALL BARS, U.N.O.: ASTM A615, GRADE 60
   B. BARS TO BE WELDED: ASTM A706, GRADE 60
2. MINIMUM CLEARANCES BETWEEN PARALLEL REINFORCING STEEL INCLUDING DISTANCE BETWEEN SETS OF SPLICED BARS: 1" OR 1 db, WHICHEVER IS GREATER. 1 $\frac{1}{3}$" OR 1$\frac{1}{3}$ db WHICHEVER IS GREATER, AT COLUMNS, PIERS, AND PILASTERS ONLY. FOR BUNDLED BARS, MINIMUM CLEAR DISTANCES BETWEEN UNITS OF BUNDLED BARS SHALL BE SAME AS SINGLE BARS EXCEPT BAR DIAMETER IS DERIVED FROM EQUIVALENT TOTAL AREA OF BUNDLE.
7. DOWELS AT CONSTRUCTION JOINTS: PROVIDE DOWELS MATCHING SIZE AND QUANTITY OF REINFORCING STEEL INTERRUPTED AT CONSTRUCTION JOINTS, UNLESS DETAILED OTHERWISE.
8. BARS TERMINATING AT WALLS, COLUMNS, BEAMS, AND FOUNDATIONS: EXTEND BARS TO WITHIN 2" (3" AT CONCRETE POURED AGAINST EARTH OF FAR FACE OF WALL, COLUMN, BEAM OR FOUNDATION AND PROVIDE STANDARD ACI 90-DEGREE HOOK UNLESS DETAILED OTHERWISE.
12. BENDING: BEND GOLD UNLESS OTHERWISE ACCEPTED BY ARCHITECT (STRUCTURAL ENGINEER). DO NOT FIELD-BEND REINFORCING STEEL BARS EMBEDDED IN CONCRETE UNLESS OTHERWISE ACCEPTED IN WRITING BY ARCHITECT (STRUCTURAL ENGINEER).
13. LAP SPLICES: PROVIDE CLASS B SPLICES UNLESS INDICATED OTHERWISE.

MAX POLE HT (FT)	MAX POLE WT (LBS)	MAX LIGHT WT (LBS)	"d" (FT)
25'-0"	250	13	4'-0" MIN
20'-0"	200	28	3'-6" MIN
14'-0"	140	30	3'-0" MIN

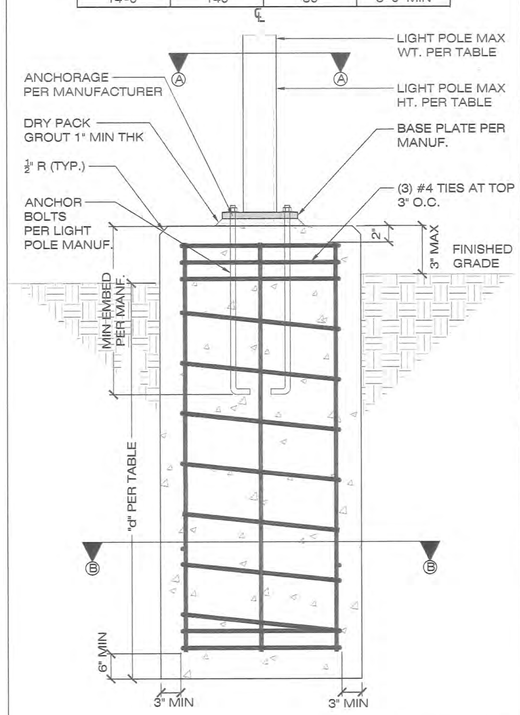

SECTION A-A

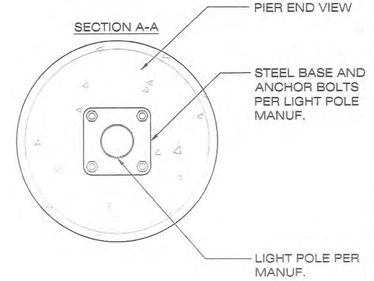

SECTION B-B

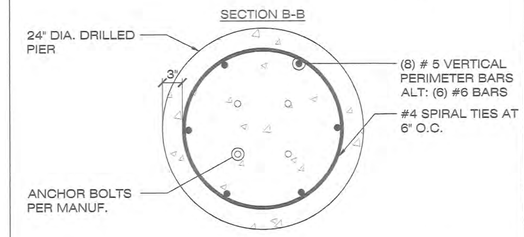

TYP. CONCRETE FOOTING DETAILS

1

SCALE: N.T.S.

ISE STRUCTURAL

STERLING | HOUSTON | PENSACOLA | SAN DIEGO | MAN | SAN JUAN
WWW.ISEENGINEERS.COM
SOCAL - NORCAL - COLORADO

TEAM CONTACT INFORMATION:

ISE PROJECT NO.: 23-7570.15
PROJECT MANAGER:
MATTHEW ESPINOZA
MATTHEW@ISEENGINEERS.COM

PROJECT DESIGN ENGINEER:
LUIS BOZ
LUISB@ISEENGINEERS.COM

PROJECT INFORMATION:

COPPER CREEK
PERRIS, CA

CONTACT INFORMATION:

CONTRACTOR:
JCA ENGINEERING, INC
8048 PALM AVE.
HIGHLAND CA 92346

GOVERNING JURISDICTION:
CITY OF PERRIS BUILDING & SAFE DEPARTMENT

PLAN REVISIONS

DELTA	DESCRIPTION	DATE

ENGINEER STAMP & SIGNATURE

REGISTERED PROFESSIONAL ENGINEER LUIS A. BOZ No. 5827 Exp. 6/30/24 STRUCTURAL STATE OF CALIFORNIA

DATE: 06/16/2023

SHEET TITLE:

STRUCTURAL DETAIL AND GENERAL NOTES

SHEET REV:

SHEET NUMBER

SD1

JCA Engineering Inc.
Electrical Engineering & Consulting
8048 Palm Ave
Highland, Ca.
92346
909 864-0223
Fax 909 864-0280
james.corns@jcaeng.com
JOB # 2865
P.M. JAMES CORNS

DIGALERT
DIAL BEFORE YOU DIG
TWO WORKING DAYS BEFORE YOU DIG
TOLL FREE 1-800-227-2600
A PUBLIC SERVICE BY UNDERGROUND SERVICE ALERT

DATE	BY	MARK	REVISIONS	APPR.	DATE
				CITY	

ENGINEER
DESIGNED BY: GM, AL DRAWN BY: AL CHECKED BY: DG

SEAL

REGISTERED PROFESSIONAL ENGINEER JOSEPH J. RUBERTO No. E 11795 EXP. 9/30/24 ELECTRICAL STATE OF CALIFORNIA

APPROVED BY: DATE
CONDITIONAL CITY ENGINEER
R.C.E. NO. EXP. DATE 08-03-2023
PREPARED BY: DATE
LANDSCAPE ARCHITECT
L.L.A NO. EXP. DATE

BENCHMARK

SCALE AS SHOWN
DATE

RHA LANDSCAPE ARCHITECTS PLANNERS, INC.
6800 INDIANA AVENUE, SUITE #245
RIVERSIDE, CA 92506
LIC. #2799
PH. (951) 781-1930
FAX (951) 686-8091

CITY OF PERRIS
COPPER CREEK PARK
PARK IMPROVEMENT PLANS
STRUCTURAL POLE BASE PLAN

FOR CITY OF PERRIS W.O.

SHEET NO. E-4.0
9 OF 9 SHEETS
FILE NO. RHA# 22154